LETTING DATE
Dec. 16, 2025

Reconstruction - Bridge Widening
IM-NHS-080-4(088)139--03-77
POLK COUNTY

Index of Sheets

No.	Description
Sheets	Bridge Plan
A.1	Title Sheet
A.2	Location Map Sheet
V.1	Estimated Bridge Quantities - Design No. 326
V.2 - V.47	Design No. 326
SPS Sheets	Bridge Plan Soils Sheet
SPS.1 - SPS.2	Bridge Plan Soils Sheet
Road Sheets	Road Plan
A.3 - U.9	Road Plans
C.1	Estimated Quantities - Road
C.1	Standard Plans - Road

IOWA | DOT

PLANS OF PROPOSED IMPROVEMENT ON THE

INTERSTATE ROAD SYSTEM

POLK COUNTY

Reconstruction - Bridge Widening

I-80 EB over Fourmile Creek
1.4 MI. E of NE I-35/235 Interchange (EB)

Refer to the Plan Sheets for list of applicable specifications.

Value Engineering Saves. Refer to Article 1105.14 of the Specifications.

IOWA ONE CALL
1-800-292-8989
www.iowaonecall.com
811 Know what's below. Call before you dig.

Revisions

	TOTAL 64
PROJECT IDENTIFICATION NUMBER	
10-77-035-010-05	
Contract ID NUMBER	
PROJECT NUMBER	
IM-NHS-080-4(088)139--03-77	
R.O.W. PROJECT NUMBER	
PROJECT DIRECTORY NUMBER	
7703501010	

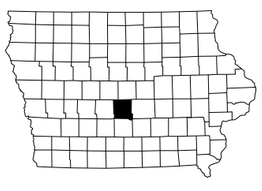

Standard Road Plans

Standard Road Plans are listed on Sheet Number C.1.

Design Data Urban

(I-80 E.B.)

2024 AADT	48,946	V.P.D.
2044 AADT	60,270	V.P.D.
2044 DHV	6,230	V.P.H.
TRUCKS	17	%
Total Design ESALs	-	

Index Of Seals

Sheet No.	Name	Type
A.1	Dusten L. Olds	Structural Design
V.6	Brice E. Stafne	Hydraulic Design
SPS.1	Brian T. Havens	Geotechnical Design
A.3	Benett J. Batenhorst	Roadway Design

Structural Design

LICENSED PROFESSIONAL ENGINEER Dusten L. Olds 25704 IOWA

I hereby certify that this engineering document was prepared by me or under my direct personal supervision and that I am a duly licensed Professional Engineer under the laws of the State of Iowa.

Signature 9/17/25 Date

Dusten L. Olds
Printed or Typed Name

My license renewal date is December 31, 2026

Pages or sheets covered by this seal: Sheets A.1, A.2, V.1 Thru V.47

R-23W

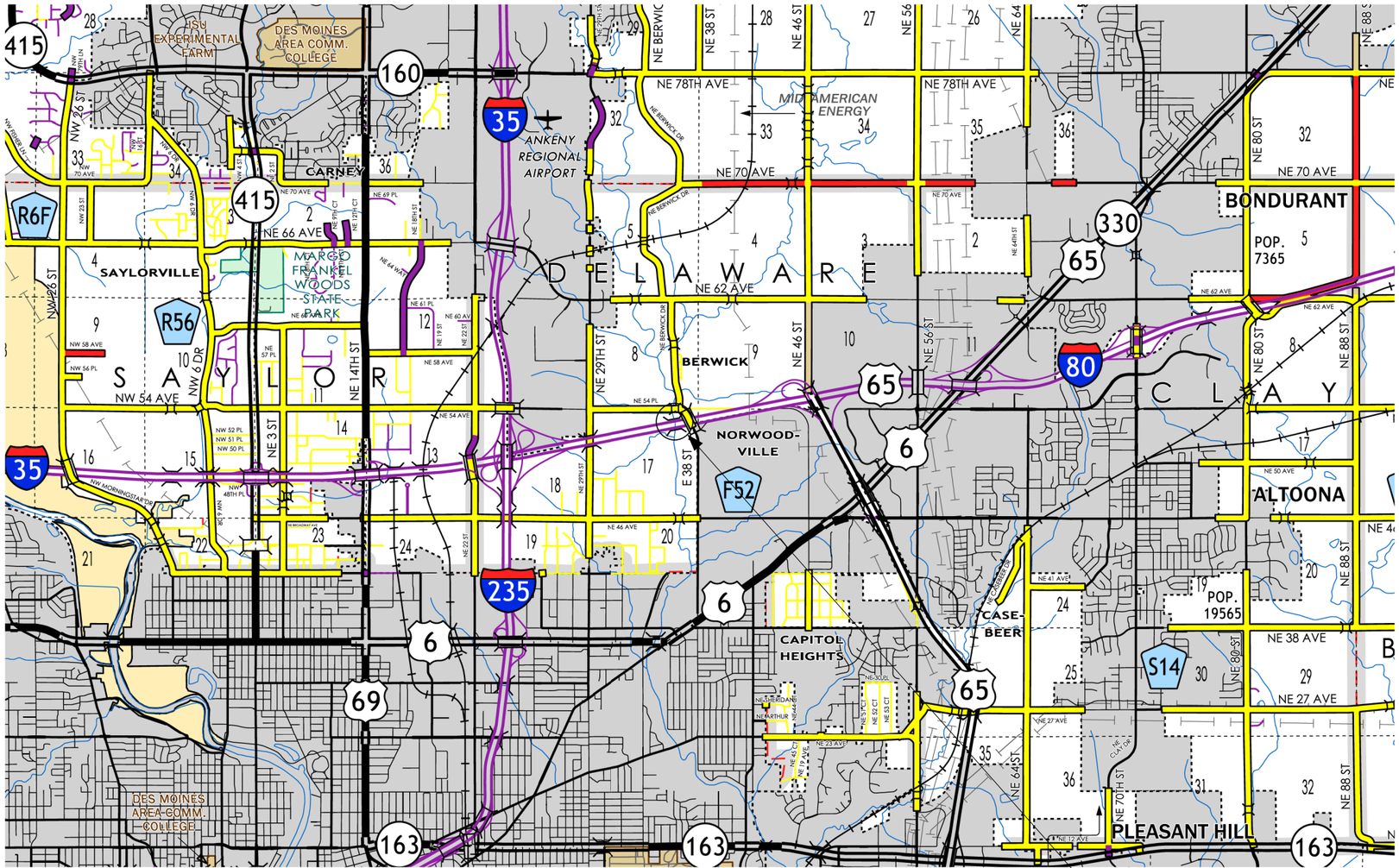

N

Polk County Location Map

Not To Scale

Design No. 326
FHWA No. 041970

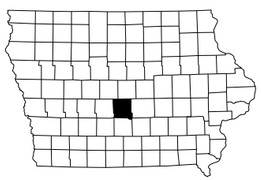

LEGEND

- INTERSTATE HIGHWAY
- PRIMARY HIGHWAY-DIVIDED
- PRIMARY HIGHWAY
- PORTLAND CEMENT CONCRETE ROAD
- ASPHALT ROAD
- BITUMINOUS ROAD
- GRAVEL ROAD
- EARTHEN ROAD
- INTERSTATE HIGHWAY (80)
- UNITED STATES HIGHWAY (65)
- STATE HIGHWAY (237)
- COUNTY HIGHWAY (S27)
- RAILROAD
- PIPELINE
- AIRPORT
- HYDROLOGY
- BRIDGE
- STATE BOUNDARY
- COUNTY BOUNDARY
- CORPORATE BOUNDARY
- TOWNSHIP LINE
- SECTION LINE
- ROAD NAMES — ABBEY ROAD
- UNINCORPORATED PLACE — ELWOOD
- STATE PARKS
- STATE INSTITUTIONS
- FEDERAL LAND

FILE NO. 32061	ENGLISH	DESIGN TEAM HDR	POLK COUNTY	PROJECT NUMBER IM-NHS-080-4(088)139--03-77	SHEET NUMBER A.2

Estimated Bridge Quantities

Item No.	Item Code	Item	Unit	Total	As Built Quantity
1	2104-2710020	Excavation, Class 10, Channel	CY	1,521	
2	2401-6750001	Removals, As Per Plan	LS	1.0	
3	2402-2720000	Excavation, Class 20	CY	240	
4	2403-0100010	Structural Concrete (Bridge)	CY	59.6	
5	2403-1000005	Fiber Reinforcement for Structural Concrete	CY	461.5	
6	2403-1000010	Trial Batch and Test Placement (Fiber Reinforced Concrete)	LS	1.0	
7	2403-7000210	High Performance Structural Concrete	CY	461.5	
8	2404-7775000	Reinforcing Steel	LB	23,322	
9	2404-7775005	Reinforcing Steel, Epoxy Coated	LB	138,237	
10	2404-7775009	Reinforcing Steel, Stainless Steel	LB	4,943	
11	2407-0550000	Beam, PPC, SBTB58.79	EACH	4	
12	2407-0550000	Beam, PPC, SBTB66.75	EACH	2	
13	2408-7800000	Structural Steel	LB	3,075	
14	2414-6424038	Concrete Barrier Rail, 3'-8"	LF	410.8	
15	2426-6772013	Repair Beam Ends	EACH	2	
16	2426-6772016	Concrete Repair	SF	4.0	
17	2433-0001054	Conc Drilled Shaft, 54" Dia.	LF	88.0	
18	2501-0201057	Piles, Steel, HP 10 x 57	LF	630	
19	2501-8400172	Temporary Shoring	LS	1.0	
20	2507-2638650	Bridge Wing Armoring - Erosion Stone	SY	25	
21	2507-3250005	Engineering Fabric	SY	2,225	
22	2507-6800061	Revetment, Class E	TON	2,040	
23	2507-8029000	Erosion Stone	TON	24	
24	2508-0970000	Containment	LS	1.0	
25	2508-0991000	Painting of Structural Steel	LS	1.0	
26	2526-8285000	Construction Survey	LS	1.0	
27	2533-4980005	Mobilization	LS	1.0	

Item No.	Estimate Reference Information
1	Includes excavation below the grading surface for placement of engineering fabric, erosion stone and revetment. For details, see Design Sheet 6. All waste must be removed from the project site.
2	Includes all work for removal and off-site disposal of the deck, barriers, abutment diaphragms and portions of the pier diaphragms and abutments of the existing 188'-4" x 56'-0" PPCB E.B. Bridge (Design No. 758) and widening plans (Design No. 1491) to the limits shown on Design Plans. Removal of scheduled items shall be in accordance with Section 2401, of the Standard Specifications. Any damage to material not to be removed shall be the responsibility of the Contractor and repaired at no extra cost to the state. No portion of the piers may be removed unless prior written approval of the Engineer is obtained. Approval shall be obtained by submitting a written request to the Engineer. The request shall include the proposed limits of removal and a detailed plan describing how the elements are to be removed. Contractor to add the following information when submitting the Iowa DNR "Notification of Demolition and Renovation" form: Name of Asbestos Inspector: Brad Azeltine Date Inspected: 6/11/2019 IA License Number: Iowa DOT Inspector Phone: 515-231-5869 Procedure used to detect the presence of asbestos materials: Polarized Light Microscopy (PLM)
3	Includes excavation at existing abutments and for abutment widening.
4	All abutment footing, abutment backwall and pier concrete is to be Class "C". Includes cost of cleaning the abutment seats and furnishing and placing of concrete sealer. Includes cost of removing and replacing abutment bearing anchor rods and plates and cost of setting dowels in pier cap.
5	Refer to the "Developmental Specifications for Fiber Reinforcement for Structural Concrete" for additional information.
6	Includes all work and materials necessary for a trial batch and test placement of fiber reinforced concrete. Refer to the "Developmental Specifications for Fiber Reinforcement for Structural Concrete" for additional information.
7	This bid item includes the concrete for the deck, abutment diaphragms, pier diaphragms and wingwalls. Refer to the "Developmental Specifications for High Performance Concrete for Structures" for additional information. Includes installation cost for dowels, all resilient joint filler required and butyl rubber membrane required. Includes furnishing and placing subdrain (including excavation), floodable backfill, porous backfill, geotextile fabric, water flooding and subdrain outlet at abutments. Includes furnishing and placing 3 inch diameter PVC plastic pipe and expanding foam in the abutment wings. Includes cost for materials and labor to provide concrete rustication lines.

Item No.	Estimate Reference Information (Cont.)
11, 12	Includes anchored curved sole plates and studs at abutments, pier bearing material and coil ties. Nonstandard stirrup lengths are used for these beams. Includes contractor filling out beam numbers by location and beam seat elevations in "PPC Beam Data Spreadsheet" and forwarding Electronic Spreadsheet to the Engineer. Special bid item required for non-standard beam lengths. Includes 2 beams with ℄ bearing to ℄ bearing length = 66'-9" (SBTB66.75) in span 2 Includes 4 beams with ℄ bearing to ℄ bearing length = 58'-9½" (SBTB58.79) in spans 1 & 3
13	Includes 8 drains(4 at 92 LB each, 4 at 94 LB each) and steel intermediate diaphragms. Includes pintle plates, pintles, keeper bars, masonry plates, bronze plates, neoprene sheet and anchor bars and plates embedded into backwall for new beams. For bearing details, see Design Sheet 29.
14	Includes material and labor associated with providing and installing the rigid steel conduit, junction boxes, and fittings. Includes 444 L.F. of 2" diameter rigid steel conduit. If placement of concrete is done by the slipforming method, Class BR concrete is required. Cast-in-place barrier rails shall use Class C mix. Price bid for this item shall include the cost of cast-in-place forms if required for placement of the concrete. Includes furnishing and installing barrier cover plates.
15	Includes all cost to trim protruding prestressing strands. Beam repair quantity is based on the 2023 bridge inspection report.
16	Concrete repair quantity is based on the 2023 bridge inspection report.
17	Includes all necessary equipment, labor, and materials to construct the 54 inch diameter concrete drilled shafts in accordance with Article 2433 of the Standard Specifications. Includes furnishing and installing permanent steel casings.
18	Piling shall be Grade 50. For additional notes, see Design Sheet 17.
20	Includes furnishing and placing engineering fabric, erosion stone, and all required excavating, shaping and compacting for wing armoring.
21	Engineering fabric shall be material as specified for embankment erosion control in accordance with Article 4196.01, B, 3, of the Standard Specifications.
22 & 23	Estimated at 1.6 Ton/CY and shall meet requirements of Article 4130 of the Standard Specifications. Broken concrete and granite is not allowed.

Index Of Sheets

Sheet Descriptions	Sheet Number
Estimated Quantities	V.1
Summary Quantities	V.2
General Notes	V.3
Situation Plan	V.5
Staking Diagram	V.7
Pier Details	V.8
Abutment Removals	V.10
Abutment Details	V.12
Superstructure Details	V.18
Beam Details	V.24
Steel Diaphragm Details	V.27
Bearing Details	V.29
Repair Details	V.30
Top of Deck Elevations	V.34
Haunch Data Details	V.36
Conduit Details	V.37
Barrier Rail Details	V.38
Bridge Wing Armoring	V.45
Subdrain Details	V.46
Abutment Backfill Details	V.47
Soil Profile Sheets	SPS.1

Roadway quantities are shown elsewhere in these plans.

Design For Widening & Redecking of 16°54'00" Skew (LA)

188'-4" x 70'-0" Pretensioned Prestressed Concrete Beam Bridge

59'-9 1/2" End Spans 68'-9" Interior Span

Estimated Quantities

STA. 1173+91.29, 42.00' Rt. (℄ I-80 Existing) Turn-in Date: October 2025

Polk County

IOWA DEPARTMENT OF TRANSPORTATION

Design No. 326 Design Sheet No. 1 of 47 FHWA No. 041970

Summary of Concrete Quantities

Location	Structural Concrete	◑ HPC Structural Concrete
West Abutment Ftg.	16.6	-
East Abutment Ftg.	16.6	-
Bridge Deck + Abut. & Pier Diaphragm + Abut. Wings	-	461.5
Pier No. 1	13.2	-
Pier No. 2	13.2	-
Total (Cu. Yds.)	59.6	461.5

◑ Fiber Reinforced

Summary of Reinforcing Steel

Location	Non-Coated Reinforcing Steel	Stainless Steel Reinforcing Steel	Epoxy Coated Reinforcing Steel
Bridge Deck + Abutment Footing ∗	-	-	122,588
Pier No. 1	11,661	-	-
Pier No. 2	11,661	-	-
North Barrier Rail	-	2,199	7,284
South Barrier Rail	-	2,298	7,803
Barrier Rail - End Sections	-	446	562
Total (Lbs.)	23,322	4,943	138,237

∗ Includes Abutment Diaphragms, Abutment Wings and Pier Diaphragms

Summary of Excavation

Location	Class 10 Excavation	Class 20 Excavation
West Abutment	896	120
East Abutment	625	120
Total (Cu. Yds.)	1,521	240

Summary of Foundations

Location	Substructure Type	Foundation Type	Number	Length (Lin. Ft.)	Total (Lin. Ft.)
West Abutment	Semi-Integral Abutment	HP 10x57	7	45	315
East Abutment	Semi-Integral Abutment	HP 10x57	7	45	315
Pier No. 1	T-Pier Extension	Conc. Drilled Shaft, 54" Dia.	1	44.0	44.0
Pier No. 2	T-Pier Extension	Conc. Drilled Shaft, 54" Dia.	1	44.0	44.0
	Total HP 10x57 (Lin. Ft.)				630
	Total Conc. Drilled Shaft, 54" Dia. (Lin. Ft.)				88.0

Summary of Structural Steel

Location	Total (Lbs.)
Diaphragms	1,091
Bridge Deck Drains	752
Masonry ℙ / Bronze Bearing Assembly	1,232
Total (Lbs.)	3,075

Summary of Bearings

Location	Bearing Type	Number	Associated Bid Item
West Abutment	Masonry ℙ / Bronze Bearing Assembly	2	Structural Steel
East Abutment	Masonry ℙ / Bronze Bearing Assembly	2	Structural Steel
Pier No. 1	Plain Neoprene 1"	2	PPC Beams
Pier No. 2	Plain Neoprene 1"	2	PPC Beams

Design For Widening & Redecking of 16°54'00" Skew (LA)

188'-4" x 70'-0" Pretensioned Prestressed Concrete Beam Bridge

59'-9 1/2" End Spans 68'-9" Interior Span

Summary Quantities Sheet

STA. 1173+91.29, 42.00' Rt. (℄ I-80 Existing) Turn-in Date: October 2025

Polk County

IOWA DEPARTMENT OF TRANSPORTATION

Design No. 326 Design Sheet No. 2 of 47 FHWA No. 041970

Specifications:

Design: AASHTO LRFD 8th Ed, Series of 2017, except as noted in the current Iowa Bridge Design Manual.

Construction: Iowa Department of Transportation Standard Specifications for Highway and Bridge Construction, Series 2023, plus applicable General Supplemental Specifications, Developmental Specifications, Supplemental Specifications and Special Provisions, including the following shall apply to construction work on this project:

- -Developmental Specifications for "High Performance Concrete for Structures",
- -Developmental Specifications for "Fiber Reinforcement for Structural Concrete".

Design Stresses:

Design stresses for the following materials are in accordance with the AASHTO LRFD Bridge Design Specifications, 8th ed, Series of 2017, except as noted in the current Iowa Bridge Design Manual.

- -Reinforcing steel in accordance with AASHTO LRFD Section 5, Grade 60 for Epoxy Coated and Non-Coated, and Grade 60 or 75 for stainless.
- -Concrete in accordance with LRFD AASHTO Section 5, f'c = 4.0 ksi, except Prestressed Beam Concrete as noted.
- -Prestressed Concrete Beams, see Design Sheet 24.
- -Structural Steel in accordance with AASHTO LRFD Section 6, ASTM A709 Grade 50 (AASHTO M270 Grade 50), except as noted.

General Notes:

This design is for the widening and redecking of the existing 188'-4" x 56'-0" PPCB E.B. Bridge, Design Nos. 758 & 1491.

The deck, widened piers and widened abutments are designed for HL-93 loading, plus 20 lbs. per square foot of roadway for future wearing surface.

The City and utility companies whose facilities are shown on the plans or known to be within the construction limits shall be notified by the Bridge Contractor of the starting date.

Electronic copies of original design plans are available to the Contractor as part of the E-Files supplied with the contract documents. Dimensions shown on these plans are based on design plans (Original Design No. 758) and widening plans (Design No. 1491).

Faint lines on plans indicate the existing structure.

It shall be the Bridge Contractor's responsibility to provide sites for excess excavated material. No payment for overhaul will be allowed for material hauled to these sites.

The approach fills are not a part of this project, but it will be included in the tied road project associated with this contract. The approach fill as shown are to be in place before abutment piles are driven.

Concrete barrier rails placed using the slipform method will require the use of a Class BR concrete in accordance with Article 2513.03, A, 2 of the Standard Specifications. Cast-in-place barrier rails shall use Class C mix. Class D concrete is not permitted for concrete barrier rails (cast-in-place or slipformed method).

All reinforcing is to be securely wired in place before concrete is poured.

Minimum clear distance from face of concrete to near reinforcing bar is to be 2" unless otherwise noted or shown.

All exposed concrete corners, 90 degrees or sharper to be filleted with a ¾" dressed and beveled strip, unless noted otherwise.

All alignment, stationing, connecting dimensions, and elevations used in the new details in these plans were developed based on the existing bridge plans and field survey. The Bridge Contractor shall field verify these details before starting construction.

Temporary shoring (sheet pile or other) shall be required as necessary to prevent the earth under the traffic lane from sloughing in during construction.

The Contractor shall submit a Temporary Shoring Plan for review. The Temporary Shoring Plan shall be designed and certified by a professional Engineer licensed in the State of Iowa. When determining slope stability to support structures such as bridges, culverts and retaining walls, a global stability analysis shall be included in Design of the Temporary shoring in accordance with Chapter 200F-1 in the Design Manual of the Iowa Dot, Design Bureau. The Contractor shall not proceed with installation of the temporary shoring without notice to proceed from the Engineer.

All plan dimensions are horizontal unless noted otherwise.

404 Permit information and the pollution prevention plan are included in the tied road plans, project No. IM-NHS-080-4(85)138--03-77

Temporary shoring submittal shall include:
- Design calculations (including a global stability analysis)
- Soil properties
- Shoring material properties
- Shoring plan layout (showing location of traffic)
- Shoring details

Temporary shoring shall be paid for as a lump sum including all cost for designing, furnishing, installing and removal. All material used for shoring shall remain the property of the Contractor. Shoring is to be removed only after backfilling has been completed. In addition to the requirements noted above, Article 1107.07 of the Standard Specifications, still applies.

These bridge plans label all reinforcing steel with English notation (5a1 is ⅝" inch diameter bar). English reinforcing steel received in the field may display the following "Bar Designation". The "Bar Designation" is the stamped impression on the reinforcing bars, and is equivalent to the bar diameter in millimeters.

English size	3	4	5	6	7	8	9	10	11
Bar Designation	10	13	16	19	22	25	29	32	36

All reinforcing bars and bars noted as dowels supplied for this structure shall be deformed reinforcement unless otherwise noted or shown.

Keyway dimensions shown on the plans are based on nominal dimensions unless stated otherwise. In addition, the bevel used on the keyway shall be limited to a maximum of 10 degrees from vertical.

During construction of this project the Bridge Contractor will be required to coordinate operations with those of other Contractors working within the same area. Other work in progress during the same period of time is shown in the tied roadway plans, Project No. IM-NHS-080-4(85)138--03-77.

The Contractor shall be responsible for ensuring stability of prestressed concrete beams during erection and construction up through the concrete bridge deck reaching its full 28-day strength. The Contractor shall provide sufficient temporary anchor bracing at beam ends and temporary intermediate bracing as needed to ensure prestressed beam stability. Partially or fully installed permanent bracing as shown in these design plans shall not be assumed sufficient to brace prestressed beams during erection and construction. Temporary bracing shall not be welded to prestressed beam stirrups.

Guardrail is to be placed under tied project IM-NHS-080-4(85)138--03-77.

Working Drawing and Calculation Submittals

Working drawings and calculations shall be submitted for the following items shown in the table below. (Note additional working drawings and calculations may be required in accordance with Article 1105.03 of the Standard Specifications.)

Submittal Requirements for working drawings and calculations shall be in accordance with 1105.03 of the Standard Specifications for Highway and Bridge Construction of the Iowa Department of Transportation. The absence of a certification requirement for a submittal does not relieve the contractor of the responsibility to attain certification.

Calculation submittals in the table which are associated with working drawing submittals shall be submitted on the same day. Review time for calculation submittals shall be of the same duration as and run concurrently with review time for associated working drawings. The calculation submittals listed in the table are not meant to be an exhaustive list and do not relieve the Contractor from providing additional calculation submittals if requested by the Engineer.

No.	Working Drawing Description	Working Drawing File Name Convention for Submittal	Certified by Iowa P.E. (Yes/No)
1	Steel Diaphragms	(088)_Polk_Design326_SteelDiaphragms.pdf	No
2	Deck Drains	(088)_Polk_Design326_DeckDrains.pdf	No
3	Deck Removal Plan	(088)_Polk_Design326_DeckRemovalPlan.pdf	Yes
4	Barrier Cover Plates	(088)_Polk_Design326_BarrierCoverPlates.pdf	No
5	Bearing Anchor Bars	(088)_Polk_Design326_BearingAnchorBars.pdf	No
6	Temporary Shoring Plan	(088)_Polk_Design326_TemporaryShoringPlan.pdf	Yes
No.	**Calculation Description**	**Calculation File Name Convention For Submittal**	**Certified by Iowa P.E. (Yes/No)**
7	Deck Removal Plan	(088)_Polk_Design326_DeckRemovalPlan.pdf	Yes
8	Temporary Shoring Plan	(088)_Polk_Design326_TemporaryShoringPlan.pdf	Yes

Containment and disposal of waste shall be in accordance with Section 2508, of the Standard Specifications. All costs associated with hauling and depositing of waste at the designated site/facility shall be the responsibility of the Contractor and included in the contract price bid for the "Containment" item.

Abutment bearings (sole plates and masonry plates) are to be cleaned and painted. Cleaning by vacuum blasting or by a non-blasting method is required. Surface to be painted shall be prepared in accordance with Steel Structures Painting Council (SSPC) SP3. Surfaces of the abutment bearings are to be given one coat of both a rust inhibitor type primer and final coat as approved by the Engineer. The color of the dry paint should approximate the color of concrete. This work shall be measured and paid for at the contract unit price per lump sum for the bid item, "Painting of Structural Steel".

Bridge Deck Dimensions Table

	Item	Units	Quantity
1	Deck Length	L.F.	191.3
2	Minimum Deck Width	L.F.	73.2
3	Maximum Deck Width	L.F.	73.2
4	Deck Area	S.F.	14,003

1. Deck length is measured from face-to-face of paving notches along the centerline of the roadway.

2, 3. Deck widths are measured from out-to-out of deck perpendicular to the centerline of the roadway.

4. Deck area is to be based on the face-to-face paving notch distance and out-to-out deck dimensions.

A scrape sample was taken from an abutment bearing of this bridge to get an indication of the existence of and level of total lead and total chromium. Analysis of total lead on this sample was 1200 Parts Per Million (PPM.) Analysis of total chromium on this sample was <29 PPM. These analysis show the existence of these two toxic constituents. Levels indicated by these tests could create conditions above regulatory limits for health and safety requirements. No other constituents were analyzed. The bidder should not rely on the Iowa DOT's testing and analysis for any purpose other than as an indication of the existence of these two toxic constituents.

The lump sum bid for "Removals as Per Plan" shall include all costs associated with removing the bridge deck, barriers, abutment diaphragms and portions of the pier diaphragms and abutments to the limits shown in these plans. Removals shall be in accordance with Section 2401 of the Standard Specifications. Any damage to other portions of the existing structure not noted for removal shall be the responsibility of the Bridge Contractor and shall be repaired at no extra cost to the State.

Design History at this Site

(Includes this Design)

Des. No.	Type of Work
758	Original Design - PPCB
1178	Overlay
1491	Bridge Widening - PPCB
1392	Remodel Abutments, Reoverlay
2813	Raise Paving Notches & Replace Approaches
1717	Erosion Repair
2318	Erosion Repair
326	Bridge Widening and Redecking

Traffic control plan:
The roadway will be open to thru traffic. Refer to the traffic control plan included in the tied road plans, Project No. IM-NHS-080-4(85)138--03-77.

Design For Widening & Redecking of 16°54'00" Skew (LA)

188'-4" x 70'-0" Pretensioned Prestressed Concrete Beam Bridge

59'-9 1/2" End Spans 68'-9" Interior Span

General Notes

STA. 1173+91.29, 42.00' Rt. (℄ I-80 Existing) Turn-in Date: October 2025

Polk County

IOWA DEPARTMENT OF TRANSPORTATION

Design No. 326 Design Sheet No. 3 of 47 FHWA No. 041970

General Notes (Cont.):

In addition to the requirements of Article 2413.03, G, of the Standard Specifications, both exposed abutment bridge seats and wash surfaces shall have an application of concrete sealer in accordance with Article 2403.03, P, 3, of the Standard Specifications.

Forms for pier caps on Pier Nos. 1 and 2 may be removed with the approval of the Engineer when the following two conditions have been met:

- Pier cap concrete has been in place for a minimum of 2 calendar days excluding days that the concrete surface is subjected to temperatures at or below 40°F and
- The pier cap concrete strength is at least 2500 psi.

Minimum concrete compressive strength of 2500 psi shall be verified by flexural strength according to Materials I.M. 316 with a minimum flexural strength of 450 psi or by the maturity method according to Materials I.M. 383. Curing of pier cap concrete shall be in accordance with the Standard Specifications. Pier cap concrete shall be subjected to exterior loads in accordance with Article 2403.03, N, 2, of the Standard Specifications.

This project will impact City of Des Moines stream gauge ATN14, Fourmile Creek (central Iowa) near Altoona I-80, IA (DMX). Contact City of Des Moines 30 days prior to construction that will impact the gage. City of Des Moines Engineering Department Contact:
Dan Pritchard (515) 323-8163

Bridge repairs shall consist of:

① Remove the existing PC deck, barrier curbs, abutment diaphragms, and partially remove the pier diaphragms. Construct widened abutments, piers and two new beam lines N & O. Construct a new 8½" bridge deck and new 44" single slope barrier rails.

② Remove and replace approaches with full length standard approaches including new BE joints. Incorporate new joints between the bridge and approach slabs.

③ Replace existing expansion joints and abutment backwalls at both abutments with semi-integral abutment construction. Clean and seal the abutment seats. Include new abutment backfill and subdrains.

④ Clean, repair and paint abutment bearings.

⑤ Remove and replace existing slope protection.

⑥ Repair concrete area on East Abutment.

⑦ Repair existing beam ends.

Concrete Removal Notes:

The Bridge Contractor is to use extreme care when removing the deck concrete at the beam locations to avoid damaging the top flange and ½" diameter hoop bars of the beam. Prior to commencing any deck removal work, the Contractor shall notify the Engineer of the start date for deck removal work in order to demonstrate the removal procedure on a small portion of the deck while the Inspector is present. Damage may require the Contractor to modify the removal process prior to approval to proceed.

Concrete removal shall be initiated with a ¾" saw cut wherever possible.

Removals shall be in accordance with Section 2401 of the Standard Specifications. Any damage to other portions of the existing structure not noted for removal shall be the responsibility of the Contractor and shall be repaired at no extra cost to the State.

Once the deck concrete over the beam is removed, all remaining debris shall be cleaned from the beams to provide a suitable bond between the beam and concrete deck.

The existing ½" diameter hoop bars are an integral part of the existing beam top flange. All damage sustained to the top flange and/or ½" diameter hoop bars shall be identified and repaired.

If one or more of the existing beams or hoop bars are damaged during removals, the Contractor shall repair or replace the damaged beam or beams. Adjacent bearings shall also be replaced. The Engineer will determine what repairs and/or replacements are required.

All material, equipment, and labor associated with removal of the deck, repair of any damage, or beam and bearing replacement shall be considered incidental to the bid item "Removals, as Per Plan".

All partial removals (e.g. - at pier and abutment diaphragms) shall be in accordance with Section 2401 of the Standard Specifications. All such removals shall be to neat sawcuts to provide clean straight surfaces at interfaces between new concrete and remaining concrete, The removal shall be done in a manner which will prevent any damage to the existing structure to remain. The Contractor shall assume full responsibility for any damage caused, and shall repair any damaged area to its original condition, as directed by the Engineer, at the Contractor's expense. Any existing reinforcing steel which is to be "preserved" that is exposed during removal operation is to be carefully protected, cleaned and incorporated into new construction unless noted otherwise.

General Notes for Concrete Rustication:

Strips and panels used as inserts within concrete forms to create the rustication features may be made of wood, steel, plastic or other nonporous material capable of withstanding anticipated concrete pour pressures without physical defects. Wood inserts, if used, shall be free of warp, twist, checks or cracks, and shall be presoaked prior to placement of concrete in the forms.

Rustication inserts shall easily attach to forms and shall not allow leakage of concrete between the form and the insert. When steel forms are used, rustication strips may be rigidly attached to the inside surfaces of the forms. When steel forms are not used, rustication strips and other inserts for small recesses on exposed concrete surfaces shall be fastened to the forms in a manner that will permit them to remain in place when the forms are removed. Leave inserts in place until they can be removed without damage to the surrounding concrete.

The inserts shall be designed to form surfaces and features conforming to the design intent including the shape, lines, depths and dimensions shown in the plans. Create inserts using a minimum number of splice joints in their length. Splices, if used, shall be tightly joined so as not to allow gaps or leaks, and shall not create any change in alignment or shape of the rustication feature. Do not locate form ties within concrete rustications.

For rustication features following the perimeter of rounded surfaces, it may be necessary to use multiple layers of insert material in order to achieve the radius curve. This is acceptable, provided that the final shape, line, depth, and dimension of the features are maintained in the final result.

During loading of forms with concrete, take extra care to ensure proper consolidation of concrete around all rustication inserts to preserve the shape, line and depth of all intended features in the final concrete surface. Following removal of forms, repair all defects to achieve the rustication features as specified in the plans. Patch voids, honeycomb areas, etc., in accordance with the Standard Specifications. If surfaces will not receive a colored sealer coating, add white cement to the patching mortar to lighten it in order to match or be slightly lighter than surrounding concrete when dry. Completed surface shall be free from blemishes, surface voids and conspicuous form marks to the satisfaction of the Engineer. The Contractor shall correct any surface defects to the satisfaction of the Engineer at no additional cost to the project.

All costs associated with concrete rustication are to be included in the bid item "High Performance Structural Concrete".

HDR

Design For Widening & Redecking of 16°54'00" Skew (LA)
188'-4" x 70'-0" Pretensioned
Prestressed Concrete Beam Bridge
59'-9 1/2" End Spans 68'-9" Interior Span
General Notes
STA. 1173+91.29, 42.00' Rt. (℄ I-80 Existing) Turn-in Date: October 2025
Polk County
IOWA DEPARTMENT OF TRANSPORTATION
Design No. 326 Design Sheet No. 4 of 47 FHWA No. 041970

Bench Mark No. Feno0200, 1-Meter Rod Monument, Sta. 1183+18.58, 845.82' Rt., Elev. 851.56

Note:
Top of bridge deck at ℄ E.B. Roadway is 1.07' above the profile grade to account for the parabolic crown.

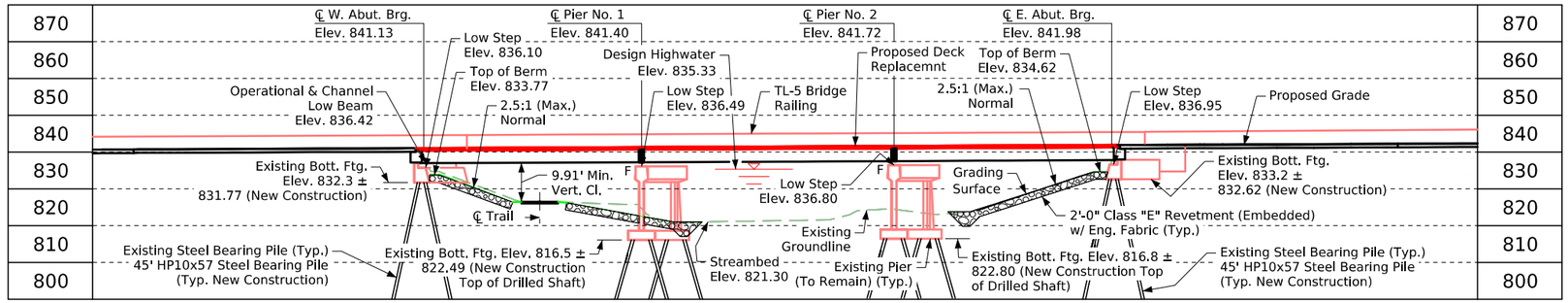

Notes:
All units are in feet unless noted otherwise.
All plan dimensions are in the horizontal plane unless noted otherwise.
For Hydraulic Data, Revetment Details and Revetment Quantities, See Design Sheet No. 6.

Longitudinal Section Along ℄ E.B. Roadway

Utilities Note:

Utilities shown on this sheet are for information only. See Road Design (Project No. IM-NHS-080-4(085)138--03-77) sheets for final utility information.

General Utility Symbols:

E - Electric Line
G - Gas Line
SAN. - Sanitary Sewer
T - Telephone Line
W - Water Line
FO - Fiber Optic Line
GHP - Gas High Pressure
ST S - Storm Sewer
TV - TV
Power Poles

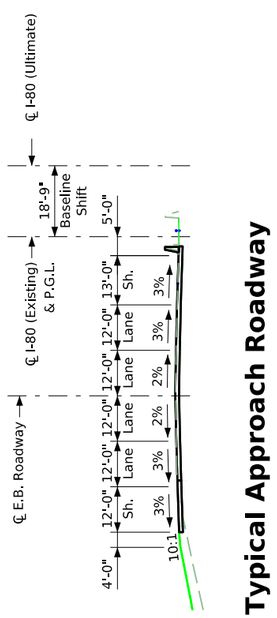

Typical Approach Roadway

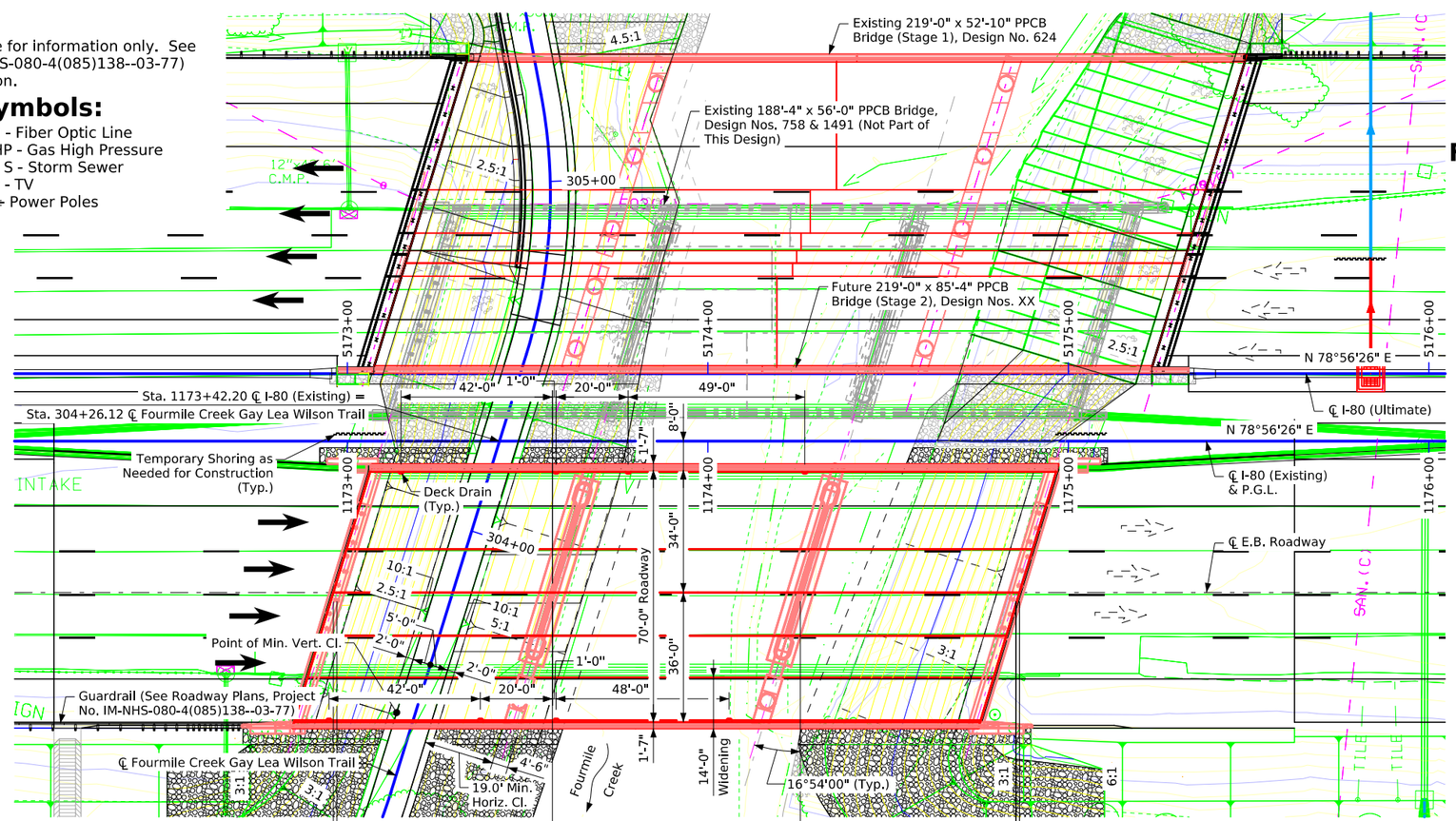

VPI Sta. = 302+25.00
VPI Elev. = 830.75

VPI Sta. = 306+00.00
VPI Elev. = 832.00

-5.0000% 0.0000% 5.0000%

VPI Sta. = 303+10.00
VPI Elev. = 826.50
VC = 40.00'

VPI Sta. = 304+90.00
VPI Elev. = 826.50
VC = 40.00'

Fourmile Creek Gay Lea Wilson Trail Proposed Profile Grade

VPI Sta. = 1177+75.00
VPI Elev. = 842.21

0.4498%

VPI Sta. = 1165+30.00
VPI Elev. = 836.61

I-80 (Existing) Proposed Profile Grade

Minimum Vertical Clearance

Overhead Station = 1173+13.46, 76.08' Rt.
Overhead Elevation = 840.34'
Depth of Superstructure = 3.85'
Underpass Station = 303+44.94, 5.00' Lt.
Underpass Elevation = 826.58
Minimum Vertical Clearance = 9.91'

I-80 E.B. Traffic Estimate

2024 AADT	48,946	V.P.D.
2044 AADT	60,270	V.P.D.
2044 DHV	6,230	V.P.H.
TRUCKS	17	%
Total Design ESALs	-	

Location

I-80 E.B. over Fourmile Creek
T-79N R-23W
Section 17
Delaware Township
Polk County
FHWA No. 041970
Bridge Maint. No. 7739.4R080
Latitude 41.656365°
Longitude -93.545922°

Situation Plan

Design For Widening & Redecking of 16°54'00" Skew (LA)

188'-4" x 70'-0" Pretensioned Prestressed Concrete Beam Bridge

59'-9 1/2" End Spans — 68'-9" Interior Span

Situation Plan

STA. 1173+91.29, 42.00' Rt. (℄ I-80 Existing) — Turn-in Date: October 2025

Polk County

IOWA DEPARTMENT OF TRANSPORTATION

Design No. 326 — Design Sheet No. 5 of 47 — FHWA No. 041970

FILE NO. 32061	ENGLISH	DESIGN TEAM HDR	POLK COUNTY	PROJECT NUMBER IM-NHS-080-4(088)139--03-77	SHEET NUMBER V.5

2:06:33 PM 9/17/2025 ESORENS pw:\\pwhdruscen01:HDR_US_Central_01\Documents\IADOT\IDOT-NEMM_Stage_5B_FinalBrDes\6.0_CAD_BIM\6.2_WIP\Bridge\PPCB Design No. 326 - I-80EB over Four Mile Creek

Estimated Berm Armoring Quantities

Location	Revetment Class E (Ton)	Erosion Stone (Ton)	Engineering Fabric (SY)	Class 10 Channel Excavation (CY)
West Abutment Berm	1,040	12	1,155	896
East Abutment Berm	1,000	12	1,070	625
Totals	2,040	24	2,225	1,521

Excavation quantity calculated includes material measured from the existing ground to the grading surface and the material of the core out measured from the grading surface to the bottom of revetment. Quantities in the table are for locations right (south) of a line 1.83' Rt. of ℄ I-80 (Existing).

Fourmile Creek Hydraulic Data

RIDB: FourmileC_Polk_8.78
Drainage Area = 83.9 Sq. Mi.
Stream Slope (HGL) = 7.0 Ft./Mi.
Avg. Low Water Stage = 824.6

Operational Low Beam = Elev. 836.42
Channel Low Beam = Elev. 836.42

Q_{25} = 6,586 cfs
Stage = 834.13

Q_{50} = 8,220 cfs
Stage = 834.72
Operational Freeboard = 1.44 Ft.
Channel Velocity = 5.2 fps

Q_{100} = 10,189 cfs
Stage = 835.33
Operational Freeboard = 0.83 Ft.
Backwater = 0.61 Ft.
Channel Velocity = 6.0 fps

Q_{200} = 11,885 cfs
Stage = 835.80
Calculated Design Scour = N/A

Q_{500} = 14,233 cfs
Stage = 837.91
Channel Freeboard = -1.75 Ft.
Avg. Bridge Velocity = 7.3 fps
Calculated Check Scour = N/A

Roadway Overtop = 841.3
Sta. = 5168+25.00 (℄ I-80 Ultimate)

Extreme HW Stage = 836.0 (Est.)
Date = 7/1/2018

Site is located within Polk County F.I.S., Dated 2/1/2019.
F.I.S. Datum 0.0 Ft. Above Project Datum.
F.I.S. Base Flood = 10,189 cfs used for no-rise information.

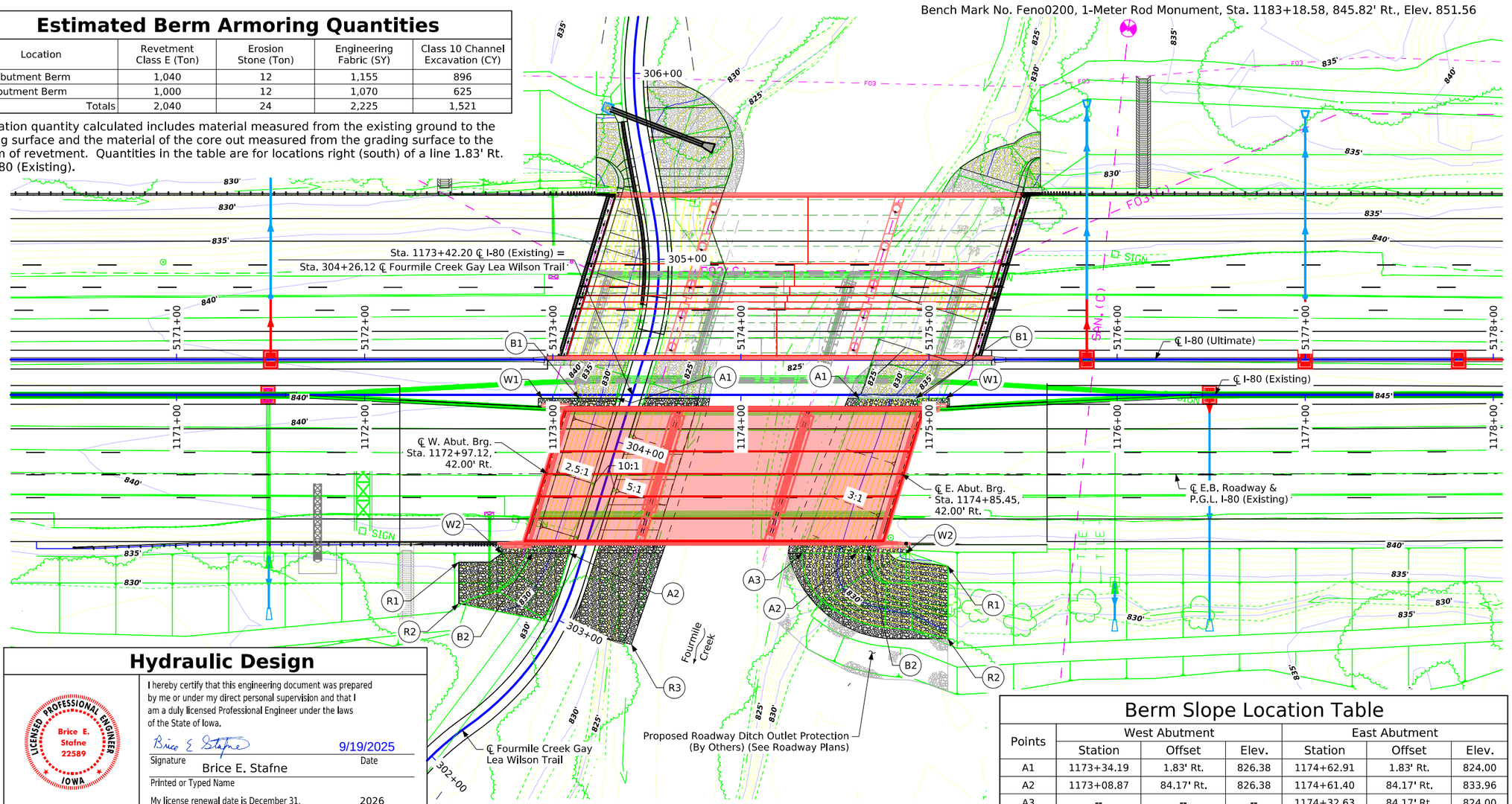

Site Plan

Hydraulic Design

LICENSED PROFESSIONAL ENGINEER Brice E. Stafne 22589 IOWA

I hereby certify that this engineering document was prepared by me or under my direct personal supervision and that I am a duly licensed Professional Engineer under the laws of the State of Iowa.

Signature: Brice E. Stafne — Date: 9/19/2025

Printed or Typed Name: Brice E. Stafne

My license renewal date is December 31, 2026

Pages or sheets covered by this seal: Hydraulic Data & Scour Protection Details on V.6

Berm Slope Location Table

Points	West Abutment Station	West Abutment Offset	West Abutment Elev.	East Abutment Station	East Abutment Offset	East Abutment Elev.
A1	1173+34.19	1.83' Rt.	826.38	1174+62.91	1.83' Rt.	824.00
A2	1173+08.87	84.17' Rt.	826.38	1174+61.40	84.17' Rt.	833.96
A3	--	--	--	1174+32.63	84.17' Rt.	824.00
B1	1173+14.03	1.83' Rt.	*	1174+92.96	1.83' Rt.	*
B2	1172+89.01	84.17' Rt.	833.77	1174+67.94	84.17' Rt.	834.62
W1	1172+94.34	1.83' Rt.	840.11	1175+08.90	1.83' Rt.	841.07
W2	1172+73.07	84.17' Rt.	839.95	1174+87.63	84.17' Rt.	840.91
R1	1172+50.00	89.00' Rt.	836.00	1175+10.00	91.08' Rt.	836.00
R2	1172+50.00	111.00' Rt.	833.00	1175+10.00	129.67' Rt.	832.00
R3	1173+41.83	132.66' Rt.	821.00	-	-	-

Berm slope elevations reflect the grading surface.
* Match Existing

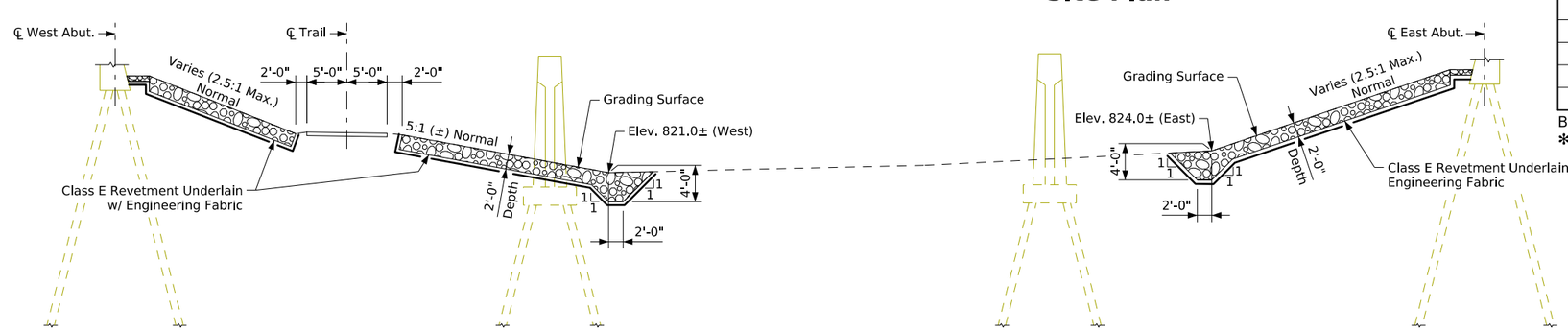

Section Through Stone Toe and Berm Lining

Design For Widening & Redecking of 16°54'00" Skew (LA)

188'-4" x 70'-0" Pretensioned Prestressed Concrete Beam Bridge

59'-9 1/2" End Spans — 68'-9" Interior Span

Situation Plan - Site

STA. 1173+91.29, 42.00' Rt. (℄ I-80 Existing) — Turn-in Date: October 2025

Polk County

IOWA DEPARTMENT OF TRANSPORTATION

Design No. 326 — Design Sheet No. 6 of 47 — FHWA No. 041970

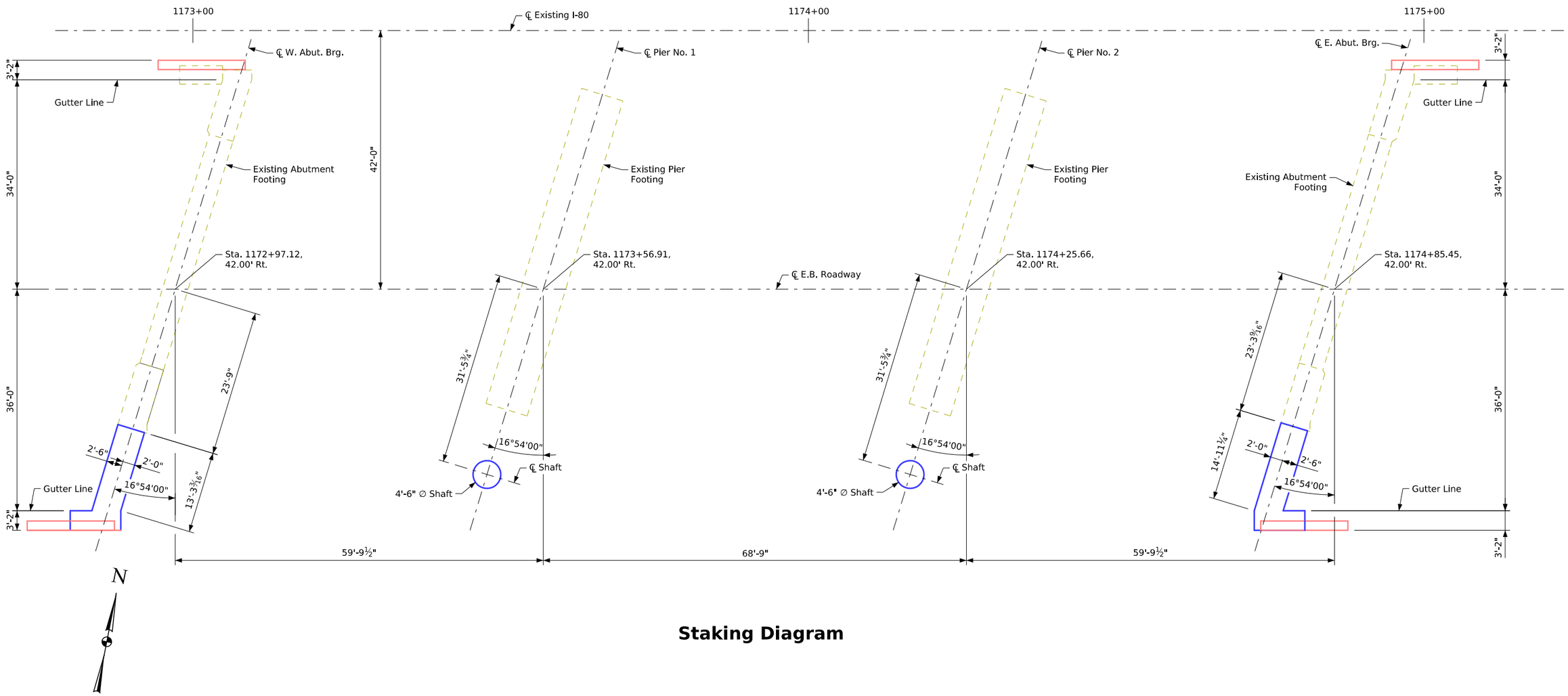

Staking Diagram

Bridge Coordinates

Location	℄ W. Abut. Brg.	℄ Pier No. 1	℄ Pier No. 2	℄ E. Abut. Brg.
Left Edge of Deck	E = 1627778.764 N = 603502.174	E = 1627837.445 N = 603513.643	E = 1627904.918 N = 603526.831	E = 1627963.600 N = 603538.301
℄ E.B. Roadway	E = 1627774.979 N = 603465.177	E = 1627833.661 N = 603476.647	E = 1627901.134 N = 603489.835	E = 1627959.815 N = 603501.304
Right Edge of Deck	E = 1627770.982 N = 603426.101	E = 1627829.663 N = 603437.571	E = 1627897.137 N = 603450.759	E = 1627955.818 N = 603462.229

Note:
An electronic file containing the bridge coordinate data is available as part of the e-files supplied with the contract documents. The Contractor shall verify these coordinates with the project horizontal control information provided in the Road Plans.

All ℄ Abut. Brg. and ℄ Pier locations were developed based on the existing bridge plans. The Bridge Contractor shall field verify these locations before starting construction. The Engineer must be notified prior to construction if the Contractor locations are different from plan locations.

Design For Widening & Redecking of 16°54'00" Skew (LA)

188'-4" x 70'-0" Pretensioned Prestressed Concrete Beam Bridge

59'-9 1/2" End Spans 68'-9" Interior Span

Staking Diagragm

STA. 1173+91.29, 42.00' Rt. (℄ I-80 Existing) Turn-in Date: October 2025

Polk County

IOWA DEPARTMENT OF TRANSPORTATION

Design No. 326 Design Sheet No. 7 of 47 FHWA No. 041970

Bench Mark No. Feno200, 1-Meter Rod Monument, Sta. 1183+18.58, 845.82' Rt., Elev. 851.56

Table of Pier Steps

Step	Pier No. 1	Pier No. 2
a	■ 2¼" ±	■ 2 1/16" ±
b	3"	3"

Table of Pier Elevations

Elevation	Pier No. 1	Pier No. 2
Exist. Elev. M	■ 836.55	■ 836.88
Elev. N	836.74	837.05
Elev. O	▲ 836.49	▲ 836.80

▲ Low Step Elevation

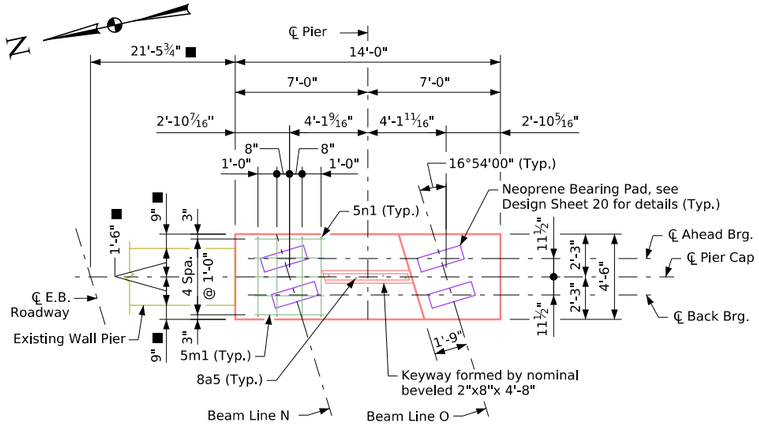

Plan of Pier Cap

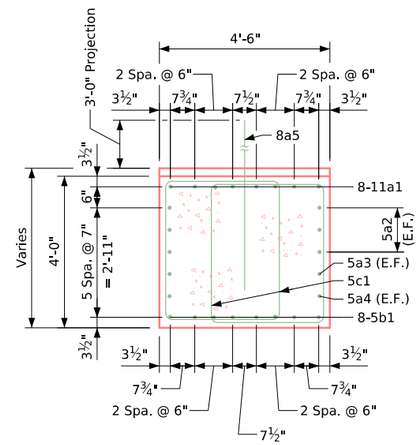

Section A-A

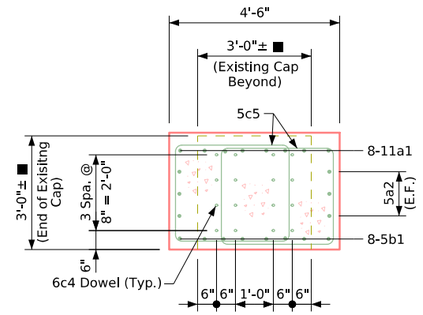

Section B-B

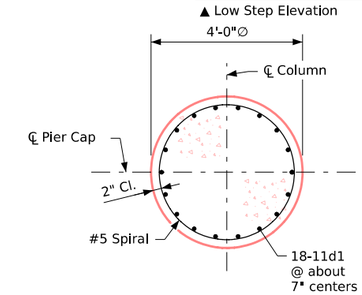

Typical Section Thru Column

Note:
Column reinforcing cage shall be oriented with respect to ℄ Pier Cap and ℄ Column/ Drilled Shaft as shown to avoid conflict with longitudinal cap reinforcing and cap stirrups.

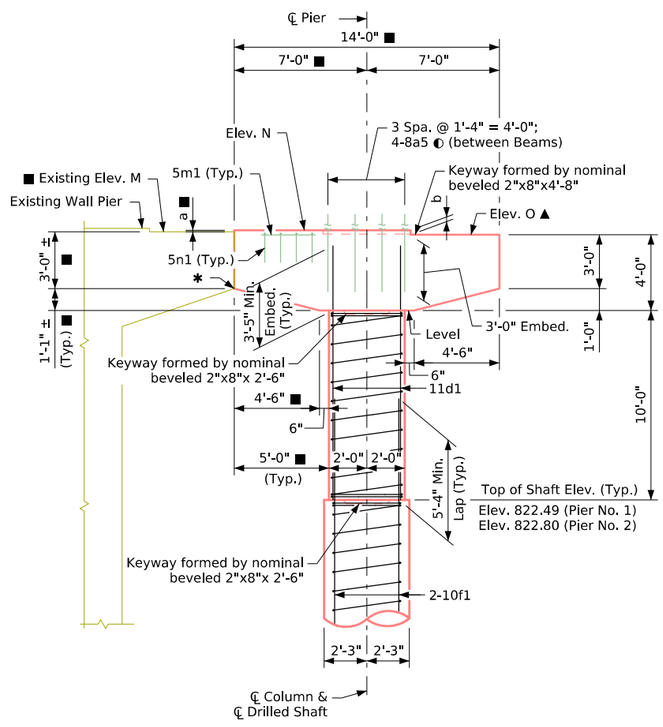

Pier Elevation

(Looking East)

Notes:
Place 5m1 and 5n1 bars under Beam N only.
◐ Shift 8a5 bars as required to avoid longitudinal cap reinforcing and cap stirrups.
✱ Match bottom of Cap with bottom of Cap of Existing Pier.
■ Field verify

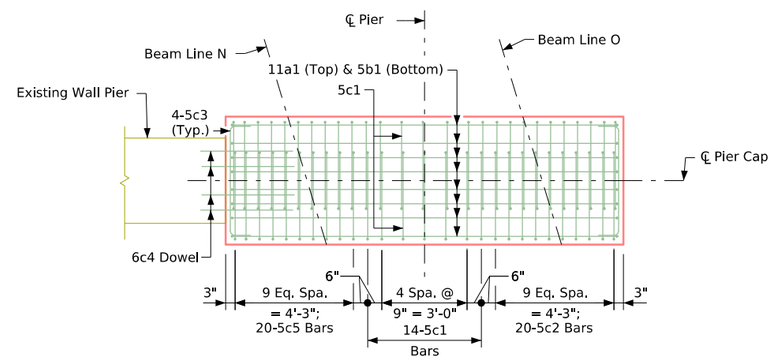

Pier Cap Reinforcing Plan

(8a5, 5m1 and 5n1 bars not shown for clarity)

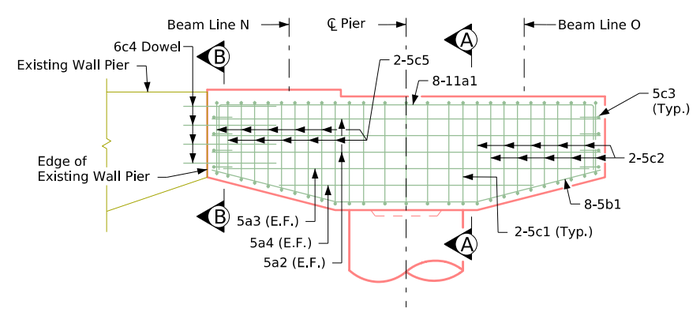

Pier Cap Reinforcing Elevation

(8a5, 5m1, and 5n1 bars not shown for clarity)

Pier Notes:

Minimum clear distance from face of concrete to near reinforcing bar is to be 2" unless otherwise noted or shown.

Spiral reinforcing is to be No. 5 bar with 3'-8" outside diameter for column and 3'-6" outside diameter for shaft, 12" pitch with 4 equally spaced L⅞"x⅞"x⅛"spacers punched to hold spirals. Spirals are to have 1½ extra turns at top and bottom of columns and shafts.

The spiral reinforcing may be spliced by lapping 32". The length of the spiral shown does not include the lapped length of the splices. The cost of the laps at splices is to be included in the price bid for other reinforcement.

Column and shaft ties spaced at 12" centers may be substituted for the spiral reinforcement. Payment will be based on the weight of the spiral reinforcement. No adjustments in reinforcing steel pay weight will be allowed. See bent bar details for splice lap length.

All reinforcing steel is to be securely wired in place before concrete is poured.

All exposed corners 90° or sharper to be filleted with ¾" dressed and beveled strip.

For pier cap early form work removal notes, see General Notes on Design sheet 4.

Contractor shall locate reinforcing in existing pier cap prior to drilling holes for dowel bars. Bars may be shifted up to 2" from locations shown in these details to avoid existing pier reinforcing.

All existing concrete surfaces that are to be in contact with new construction shall be thoroughly cleaned before placing any new concrete.

The 6c4 bars shall be set as dowels in drilled holes. Holes are to be 10" deep. The dowels shall be installed in accordance with the manufacturer's recommendations and shall use a polymer grout system in accordance with Article 2301.03, E, of the Standard Specifications.

The price bid for "Structural Concrete (Bridge)" shall include the costs of setting bars as dowels in the pier cap. Locate existing reinforcing prior to installation of dowel bars. Dowel bars may be shifted slightly to avoid existing reinforcing as needed and shall meet minimum clearance and cover requirements.

Design For Widening & Redecking of 16°54'00" Skew (LA)

188'-4" x 70'-0" Pretensioned Prestressed Concrete Beam Bridge

59'-9 1/2" End Spans — 68'-9" Interior Span

Pier Details

STA. 1173+91.29, 42.00' Rt. (℄ I-80 Existing) — Turn-in Date: October 2025

Polk County

IOWA DEPARTMENT OF TRANSPORTATION

Design No. 326 — Design Sheet No. 8 of 47 — FHWA No. 041970

FILE NO. 32061	ENGLISH	DESIGN TEAM TLP/KD/TMS	POLK COUNTY	PROJECT NUMBER IM-NHS-080-4(088)139--03-77	SHEET NUMBER V.8

4:42:03 PM 9/16/2025 ESORENS pw:\\pwhdruscen01:HDR_US_Central_01\Documents\IADOT\IDOT-NEMM_Stage_5B_FinalBrDes\6.0_CAD_BIM\6.2_WIP\Bridge\PPCB Design No. 326 - I-80EB over Four Mile Creek

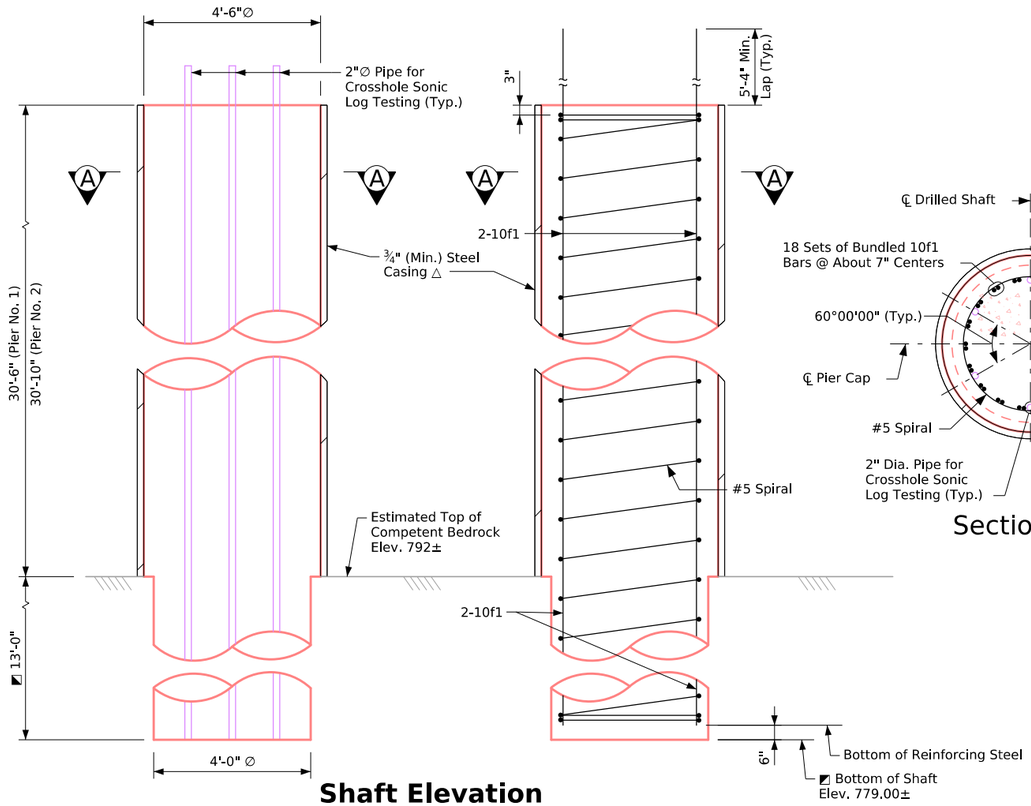

Shaft Elevation

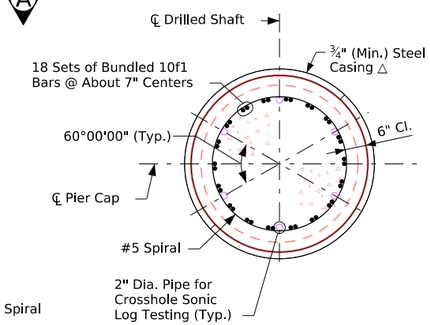

Section A-A

Bent Bar Details

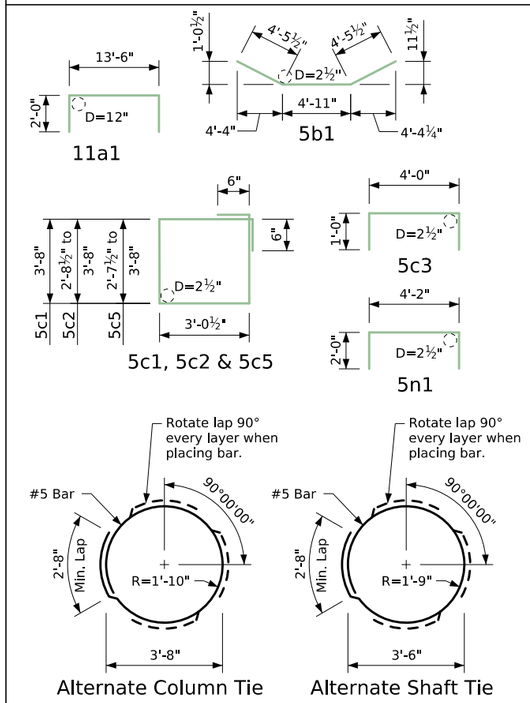

Note:
All dimensions are out to out.
D = pin diameter.

Reinforcing Bar List - One Pier

Bar	Location	Shape	No.	Length	Weight
11a1	Cap, Top, Longitudinal		8	17'-6"	744
5a2	Cap, Side, Longitudinal		6	13'-8"	86
5a3	Cap, Top, Longitudinal		2	13'-4"	28
5a4	Cap, Top, Longitudinal		2	10'-11"	23
8a5	Cap to Diaphragm Dowel		4	6'-0"	64
5b1	Cap, Bottom, Longitudinal		8	13'-10"	115
5c1	Cap, Hoops		14	14'-5"	211
5c2	Cap, Hoops, Ends		20	Varies	281
5c3	Cap, Ends		8	6'-0"	50
6c4	Cap to Existing Cap Dowel		16	3'-6"	84
5c5	Cap, Hoops, Ends		20	Varies	279
11d1	Column, Vertical		18	13'-5"	1,283
10f1	◩ Shaft, Vertical		36	48'-8"	7,539
5m1	Cap, Beam Seat, Longitudinal		5	3'-8"	19
5n1	Cap, Beam Seat, Transverse		4	8'-2"	34
#5	Column Spiral		1	144'-6"	151
	Column Spiral Spacers L⅞"x⅞"x⅛"		4	9'-8"	27
#5	◩ Shaft Spiral		1	501'-6"	523
	◩ Shaft Spiral Spacers L⅞"x⅞"x⅛"		4	42'-9"	120
	Reinforcing Steel - Total (LB)				11,661

Concrete Placement Quantities - One Pier

Location	Pier No. 1	Pier No. 2	Quantity
Cap	8.5	8.5	17.0
Column	4.7	4.7	9.4
Total (CY)	13.2	13.2	26.4

Notes:
For Pier Notes, see Design Sheet 8.
The total required design bearing for each shaft is 348 tons.
Shaft construction shall be in accordance with Section 2433 of the Standard Specifications.
Drilled shaft rock sockets shall be brushed but shall not be grooved.
The Contractor is responsible for the design of all Drilled Shaft temporary casing and permanent casing as needed for this project.
Permanent steel casing shall be according to ASTM A 252, Grade 3, produced by electric seam, butt or spiral welding. Inside diameter of casing shall be 4'-6".
After the C.S.L. testing is complete, cut C.S.L. pipes to the top of drilled shaft concrete surface before placing column reinforcement.
The contract length of the drilled shafts is based on an as-constructed shaft diameter not exceeding 4'-6". If the excavation diameter exceeds this value during construction, the Engineer must be contacted to determine if modifications to the drilled shaft design are necessary. The Contractor shall be responsible for all costs associated with modifying the drilled shaft design to account for shaft diameter exceeding the maximum value noted in the plans.
◩ Bottom of shaft elevations, shaft lengths and shaft quantities are based on 13'-0" embedment below elevation 792. Final bottom of shaft elevations, shaft lengths and shaft quantities are dependent on rock elevations determined in the field.
△ The permanent steel casing shall have a minimum wall thickness of ¾" and any additional thickness needed shall be determined by the Contractor depending on the selected methods of transporting, handling and installing the casing. No additional payment will be made for an increased casing thickness.

Design For Widening & Redecking of 16°54'00" Skew (LA)
188'-4" x 70'-0" Pretensioned
Prestressed Concrete Beam Bridge
59'-9 1/2" End Spans 68'-9" Interior Span
Pier Details
STA. 1173+91.29, 42.00' Rt. (℄ I-80 Existing) Turn-in Date: October 2025
Polk County
IOWA DEPARTMENT OF TRANSPORTATION
Design No. 326 Design Sheet No. 9 of 47 FHWA No. 041970

HDR

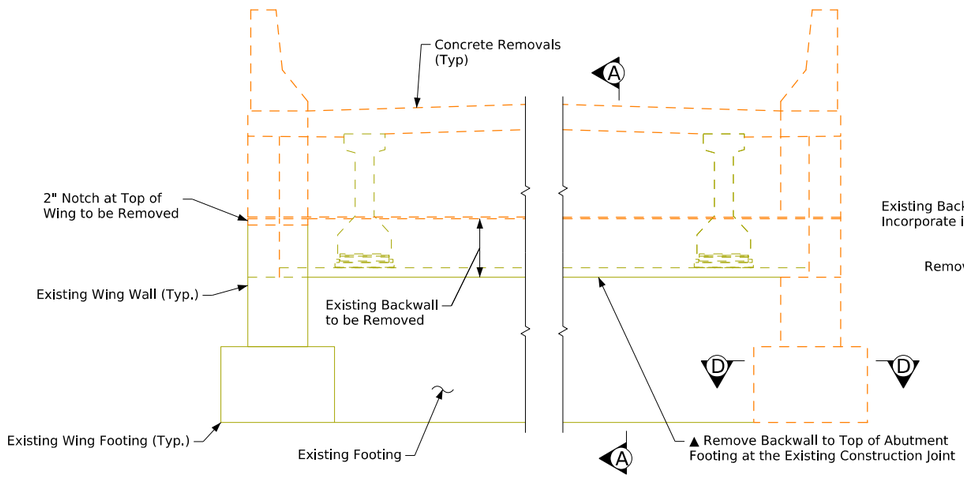

Rear Elevation
(West Abutment)

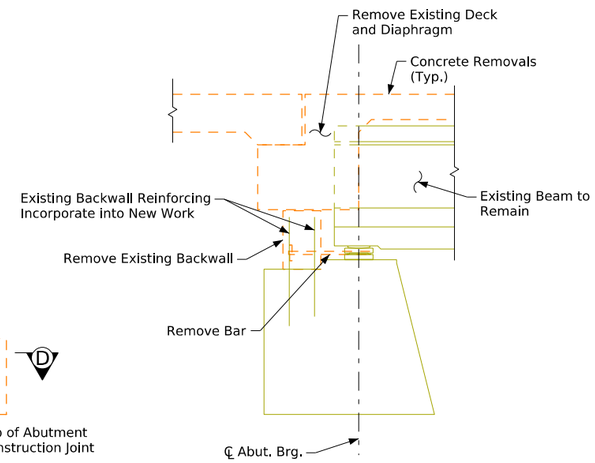

Section A-A

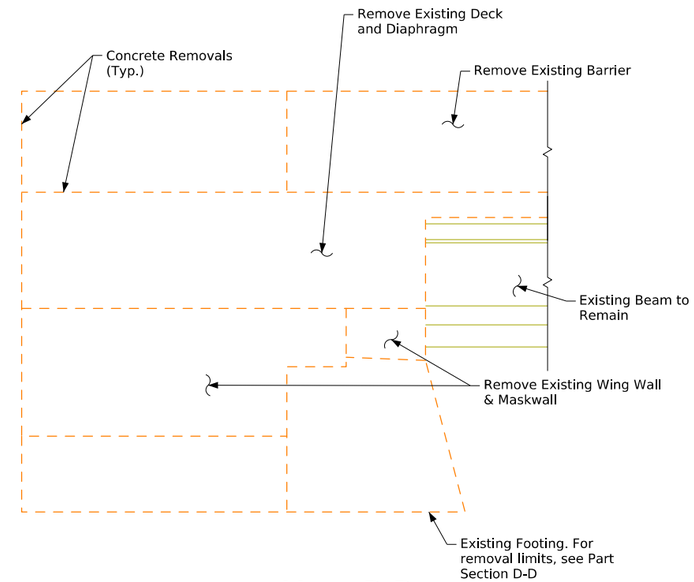

View B-B

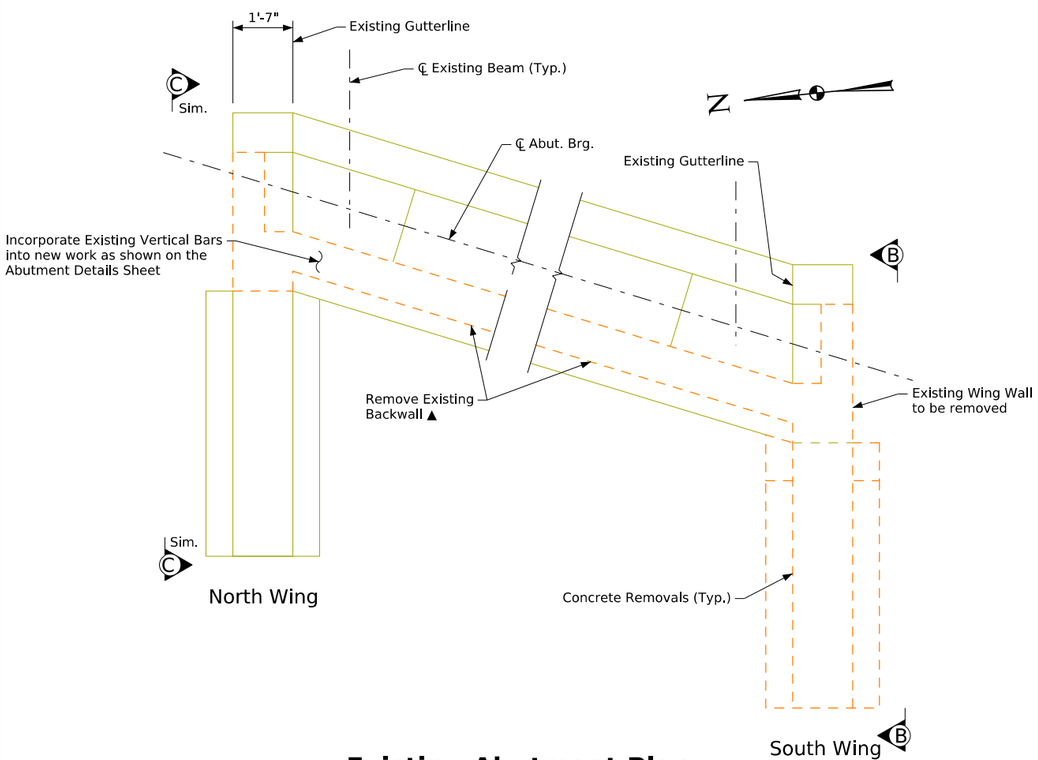

Existing Abutment Plan
(West Abutment)
(Showing section through backwall)

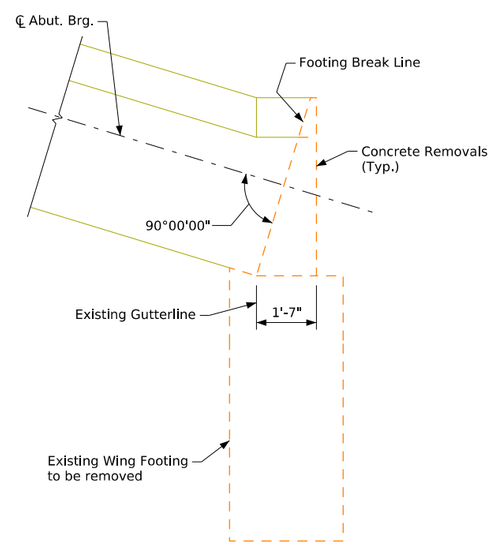

Part Section D-D
(West Abutment)

Notes:
▲ Preserve existing vertical reinforcing steel extending from footing into backwall and incorporate into new construction. Trim as shown elsewhere on plan sheets or necessary to maintain 2" clear to top of new backwall.
Existing abutment footing horizontal reinforcing bars shall be cut flush with the footing breakline surface and the remaining exposed ends painted with 2 coats of zinc rich paint.
For View C-C, see Design Sheet No. 11.

Design For Widening & Redecking of 16°54'00" Skew (LA)
188'-4" x 70'-0" Pretensioned
Prestressed Concrete Beam Bridge
59'-9 1/2" End Spans 68'-9" Interior Span
West Abutment Removals
STA. 1173+91.29, 42.00' Rt. (℄ I-80 Existing) Turn-in Date: October 2025
Polk County
IOWA DEPARTMENT OF TRANSPORTATION
Design No. 326 Design Sheet No. 10 of 47 FHWA No. 041970

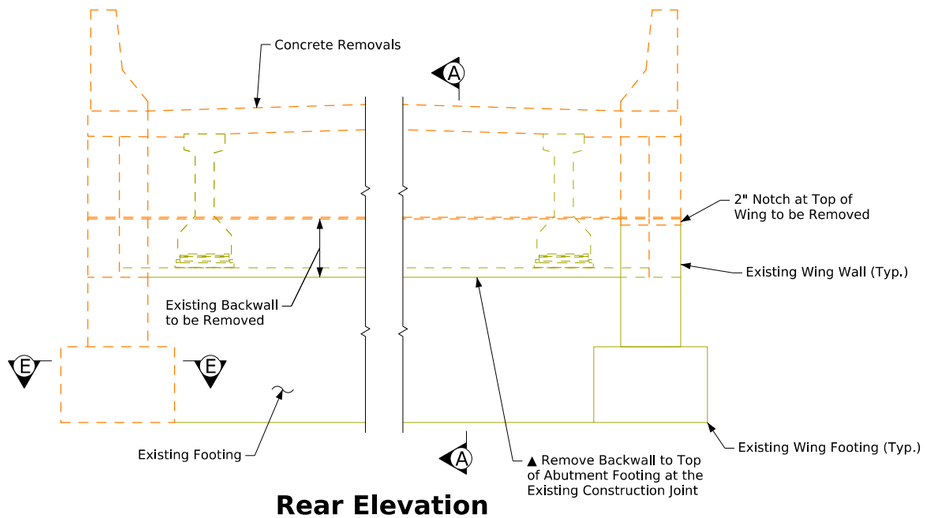

Rear Elevation
(East Abutment)

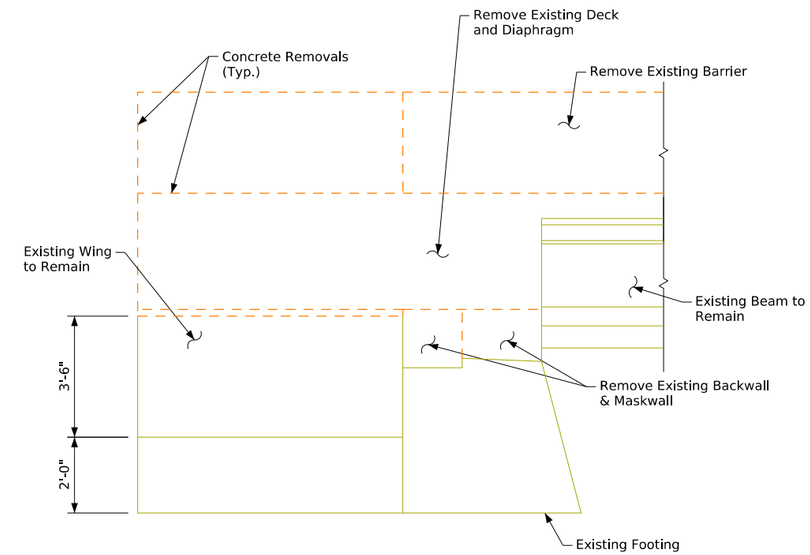

View C-C

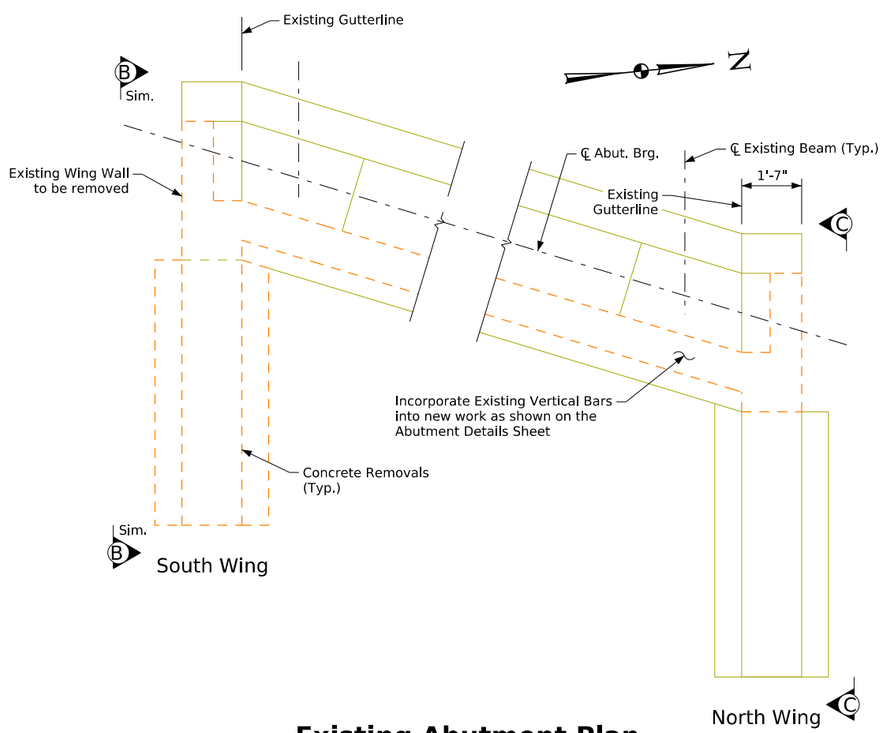

Existing Abutment Plan
(East Abutment)
(Showing section through backwall)

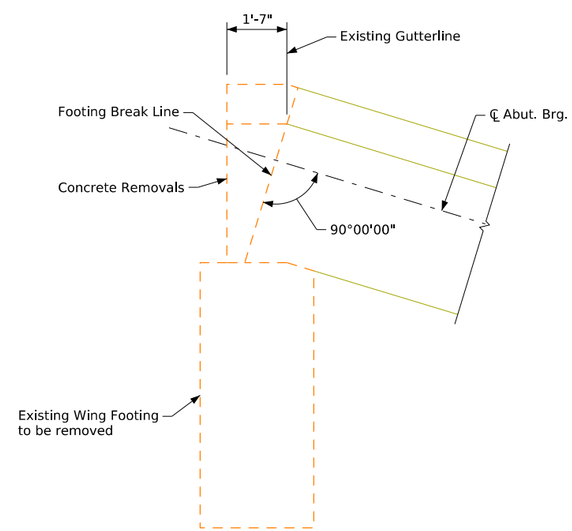

Part Section E-E
(East Abutment)

Note:
For notes, Section A-A an View B-B, see Design Sheet No. 10.

Design For Widening & Redecking of 16°54'00" Skew (LA)

188'-4" x 70'-0" Pretensioned Prestressed Concrete Beam Bridge

59'-9 1/2" End Spans 68'-9" Interior Span

East Abutment Removals

STA. 1173+91.29, 42.00' Rt. (℄ I-80 Existing) Turn-in Date: October 2025

Polk County

IOWA DEPARTMENT OF TRANSPORTATION

Design No. 326 Design Sheet No. 11 of 47 FHWA No. 041970

Abutment Notes:

See Design Sheet No. 13 for Section F-F and Section G-G.

See Design Sheet No. 23 for quantities.

See roadway sheets for approach slab details.

▲ Vertical butyl rubber membranes shall be placed after horizontal butyl rubber membrane. Vertical membrane shall extend from bottom of approach slab notch to ½" joint. Membrane shall be centered about vertical joint and fastened to both concrete faces with an approved waterproof adhesive.

See Design Sheet No. 14 and 15 for abutment backwall reinforcing and wing reinforcing details.

For additional abutment notes, See Design Sheet No. 14.

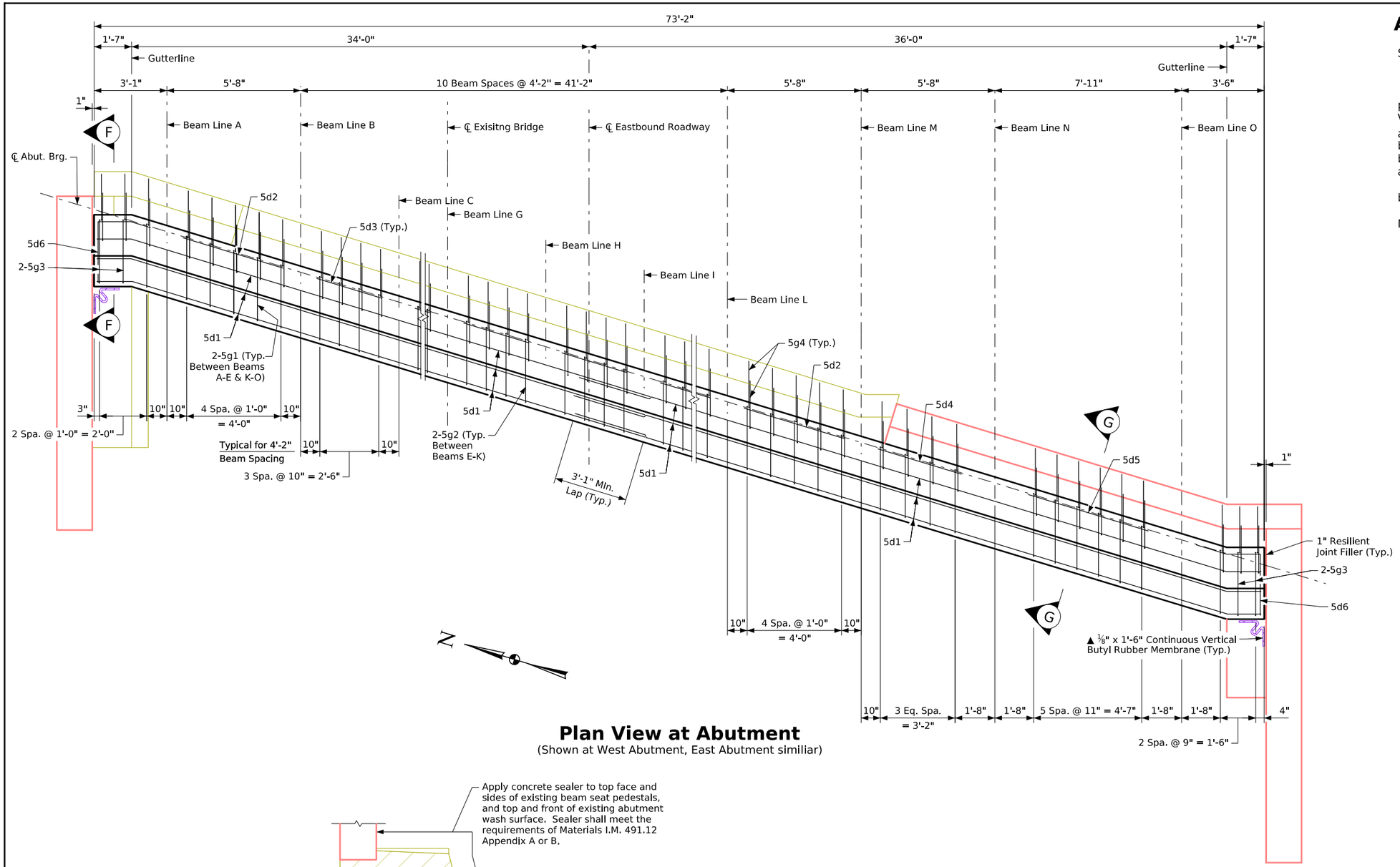

Plan View at Abutment

(Shown at West Abutment, East Abutment similiar)

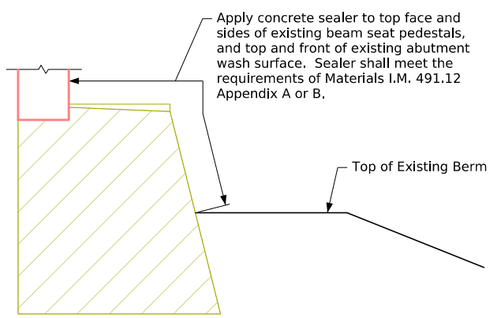

Abutment Concrete Sealer Detail

Note:
The cost of furnishing and placing concrete sealer is to be included in the price bid for "Structural Concrete (Bridge)".

Design For Widening & Redecking of 16°54'00" Skew (LA)

188'-4" x 70'-0" Pretensioned Prestressed Concrete Beam Bridge

59'-9 1/2" End Spans 68'-9" Interior Span

Abutment Details

STA. 1173+91.29, 42.00' Rt. (℄ I-80 Existing) Turn-in Date: October 2025

Polk County

IOWA DEPARTMENT OF TRANSPORTATION

Design No. 326 Design Sheet No. 12 of 47 FHWA No. 041970

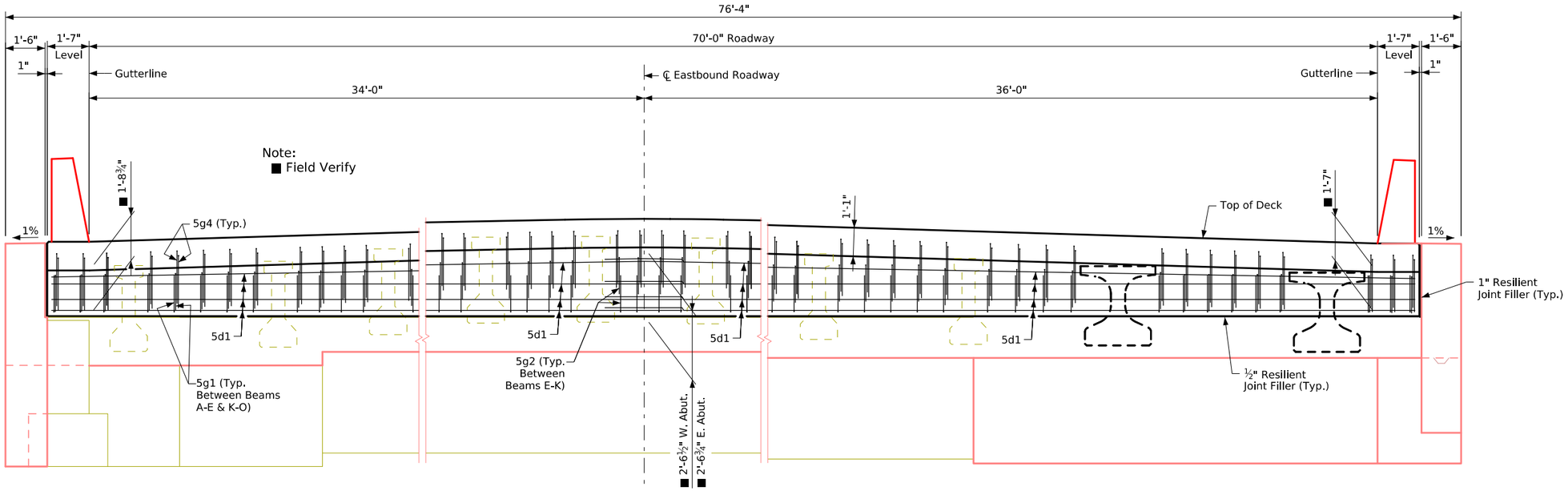

Rear Elevation View at Abutment

(Backwall and wing reinforcing not shown for clarity)
(Shown at West Abutment, East Abutment similar)

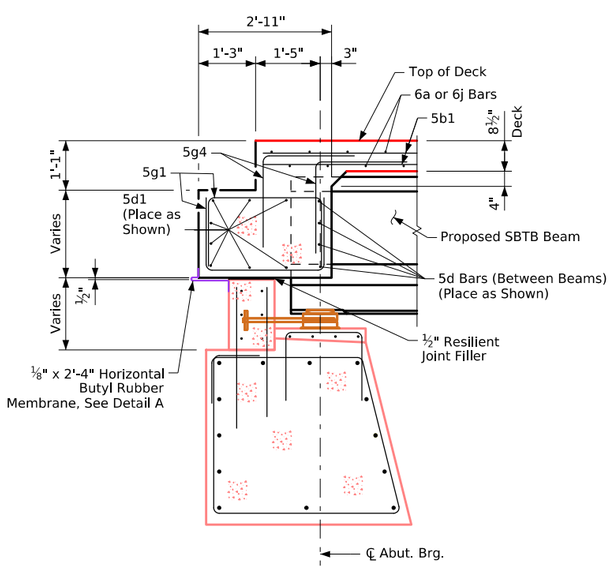

Section G-G

(Shown at south side abutment extension, similar at existing abutment on north side)

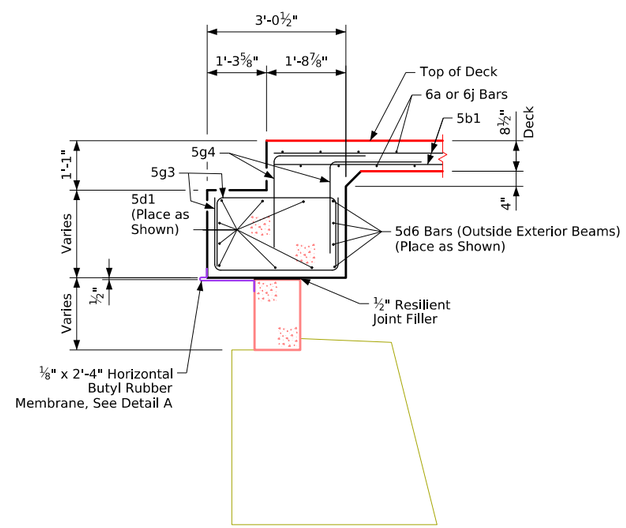

Section F-F

(Shown at existing abutment on north side, similar at south side abutment extension)

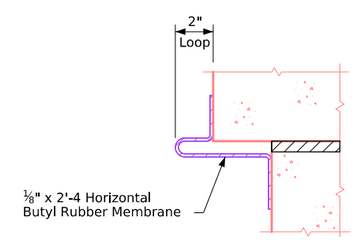

Detail A

Note:
For Abutment Notes, and location of Section F-F and Section G-G, see Design Sheet No. 12.

Design For Widening & Redecking of 16°54'00" Skew (LA)

188'-4" x 70'-0" Pretensioned Prestressed Concrete Beam Bridge

59'-9 1/2" End Spans — 68'-9" Interior Span

Abutment Details

STA. 1173+91.29, 42.00' Rt. (℄ I-80 Existing) — Turn-in Date: October 2025

Polk County

IOWA DEPARTMENT OF TRANSPORTATION

Design No. 326 — Design Sheet No. 13 of 47 — FHWA No. 041970

FILE NO. 32061	ENGLISH	DESIGN TEAM KD/DS/TMS	POLK COUNTY	PROJECT NUMBER IM-NHS-080-4(088)139--03-77	SHEET NUMBER V.13

4:42:06 PM 9/16/2025 ESORENS pw:\\pwhdruscen01:HDR_US_Central_01\Documents\IADOT\IDOT-NEMM_Stage_5B_FinalBrDes\6.0_CAD_BIM\6.2_WIP\Bridge\PPCB Design No. 326 - I-80EB over Four Mile Creek

Bench Mark No. Feno0200, 1-Meter Rod Monument, Sta. 1183+18.58, 845.82' Rt., Elev. 851.56

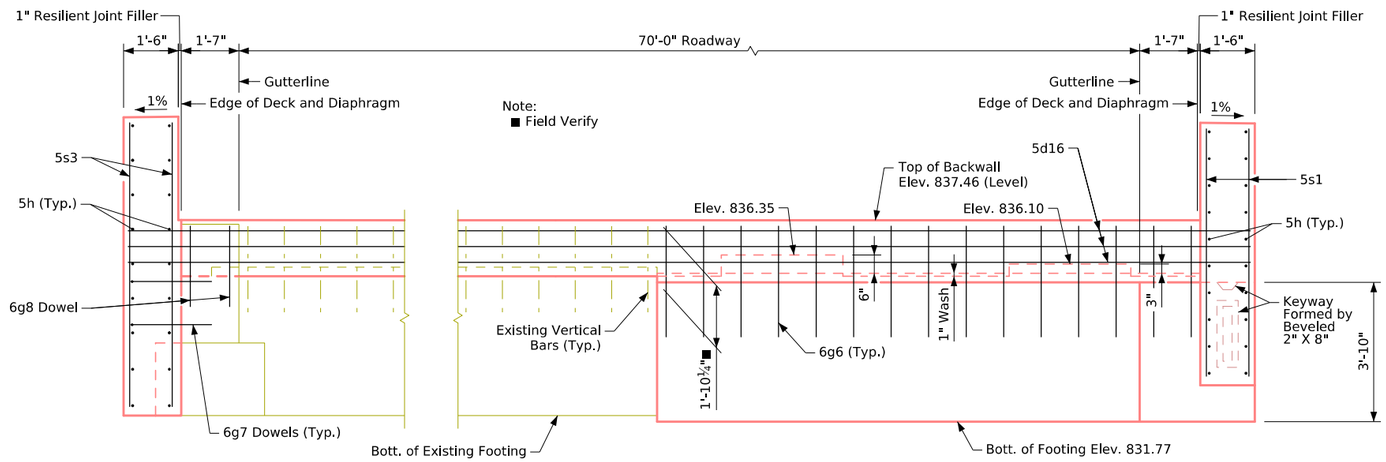

Rear Elevation West Abutment

(Diaphragm and Rail not shown for clarity)

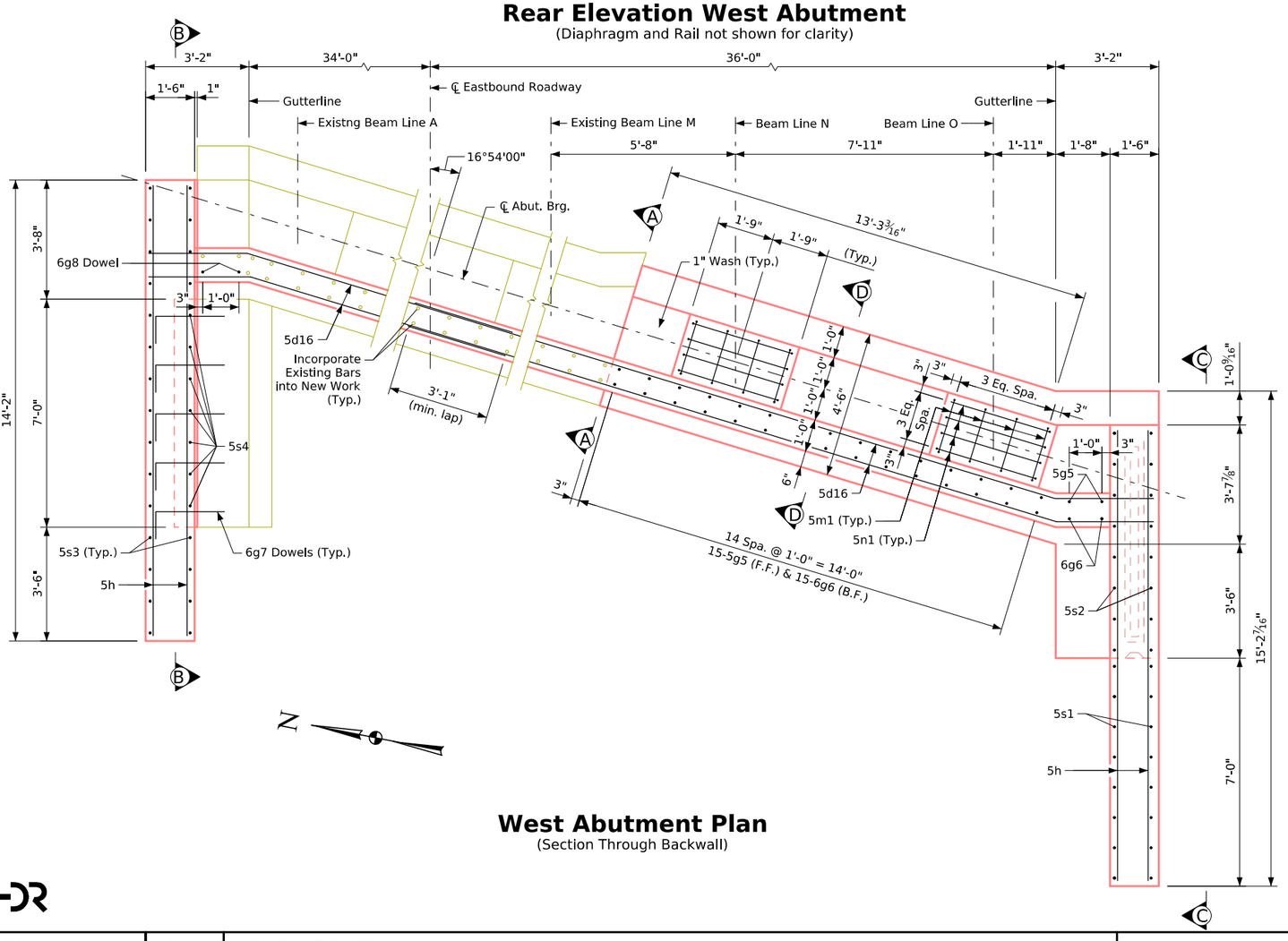

West Abutment Plan

(Section Through Backwall)

Abutment Notes:

Minimum clear distance from face of concrete to near reinforcing bar is to be 2" unless otherwise noted or shown.

If necessary to prevent damage to the end of the bridge deck and backwall from construction equipment, an appropriate method of protection approved by the Engineer shall be provided by the Bridge Contractor at no extra cost to the State.

Existing backwall vertical and horizontal bars exposed by removal operations shall be cleaned and incorporated into the new work. Cut existing backwall vertical bars as necessary to maintain 2" clear to top of new backwall. Bars or dowels that are damaged or rendered unservicable by removal operations shall be replaced by the contractor at no extra cost to the state.

Existing abutment footing horizontal reinforcing bars shall be cut flush with the footing breakline surface and the remaining exposed ends painted with 2 coats of zinc rich paint.

For Section B-B and View C-C, see Design Sheet No. 16.

Dowel Setting Notes:

The 8a14, 6g7 and 6g8 bars shall be set as dowels in drilled holes. Holes are to be 10" deep. The dowels shall be installed in accordance with the manufacturer's recommendations. Either of the following systems may be used as a bonding agent for vertical dowels, but only System "A" may be used for horizontal dowels:

A. Polymer Grout System in accordance with Article 2301.03, E of the Standard Specifications.

B. Hydraulic Cement Grout Systems. Drilled Holes are to be 2 1/2 times the dowel diameter and are to be blown clean with compressed air immediately prior to placing grout. The hydraulic cement grout shall be one of those approved in Materials I.M. 491.13 and shall be used in accordance with the manufacturer's recommendations.

The price bid for "High Performance Structural Concrete" shall include the costs of setting bars as dowels in the abutments. Locate existing reinforcing prior to installation of dowel bars. Dowel bars may be shifted slightly to avoid existing reinforcing as needed.

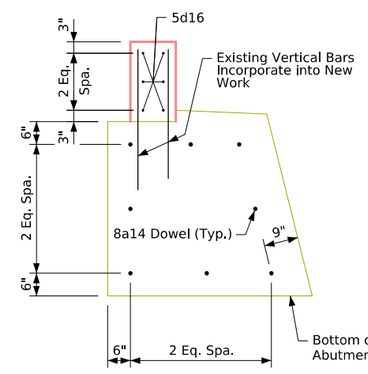

Section A-A

(Showing Footing Dowels)

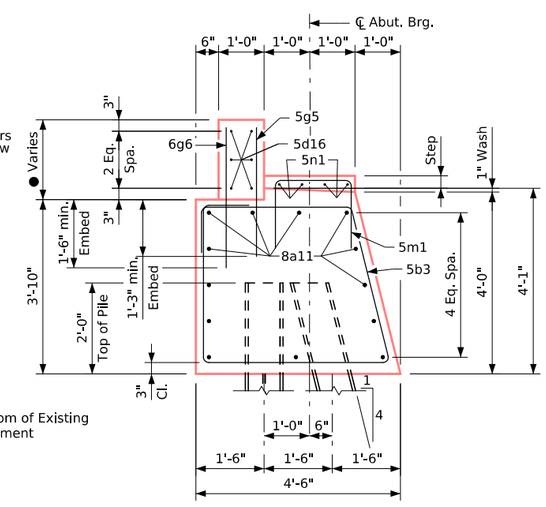

Section D-D

Note:
For Rear Elevation of abutment diaphragm, see Design Sheet No. 13.

Design For Widening & Redecking of 16°54'00" Skew (LA)

188'-4" x 70'-0" Pretensioned Prestressed Concrete Beam Bridge

59'-9 1/2" End Spans 68'-9" Interior Span

West Abutment Details

STA. 1173+91.29, 42.00' Rt. (℄ I-80 Existing) Turn-in Date: October 2025

Polk County

IOWA DEPARTMENT OF TRANSPORTATION

Design No. 326 Design Sheet No. 14 of 47 FHWA No. 041970

HDR

FILE NO. 32061	ENGLISH	DESIGN TEAM TLP/KD/TMS	POLK COUNTY	PROJECT NUMBER IM-NHS-080-4(088)139--03-77	SHEET NUMBER V.14

4:42:07 PM 9/16/2025 ESORENS pw:\\pwhdruscen01:HDR_US_Central_01\Documents\IADOT\IDOT-NEMM_Stage_5B_FinalBrDes\6.0_CAD_BIM\6.2_WIP\Bridge\PPCB Design No. 326 - I-80EB over Four Mile Creek

Bench Mark No. Feno0200, 1-Meter Rod Monument, Sta. 1183+18.58, 845.82' Rt., Elev. 851.56

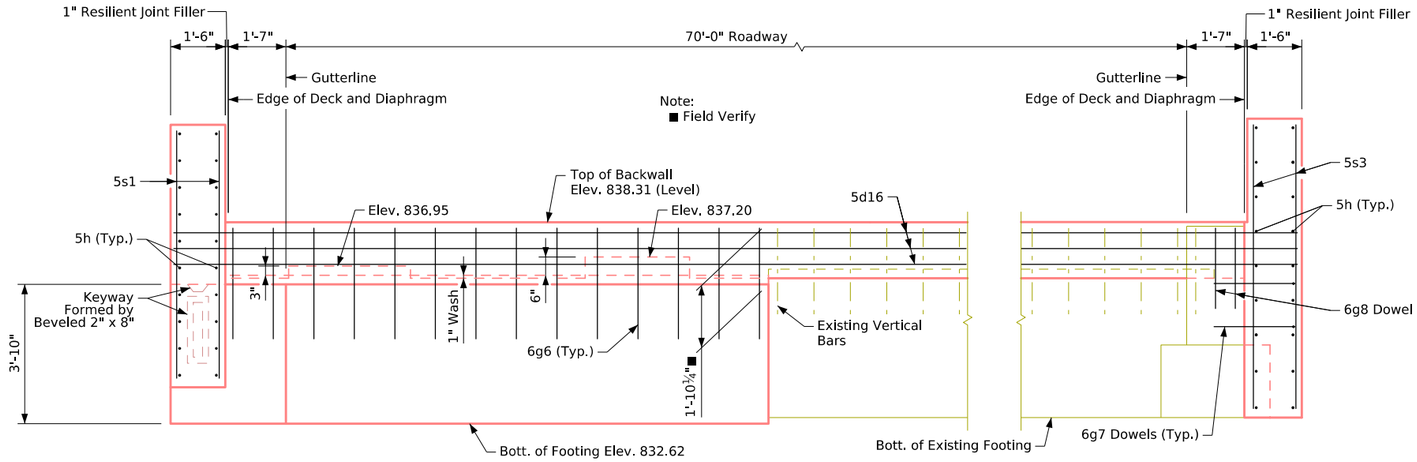

Rear Elevation East Abutment

(Diaphragm and Rail not shown for clarity)

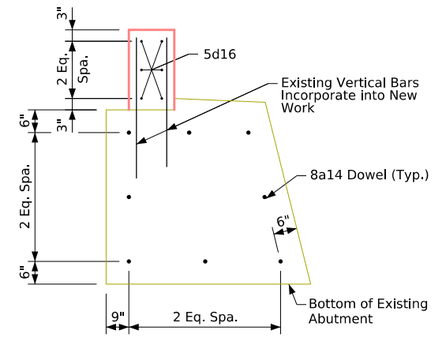

Section E-E

(Showing Footing Dowels)

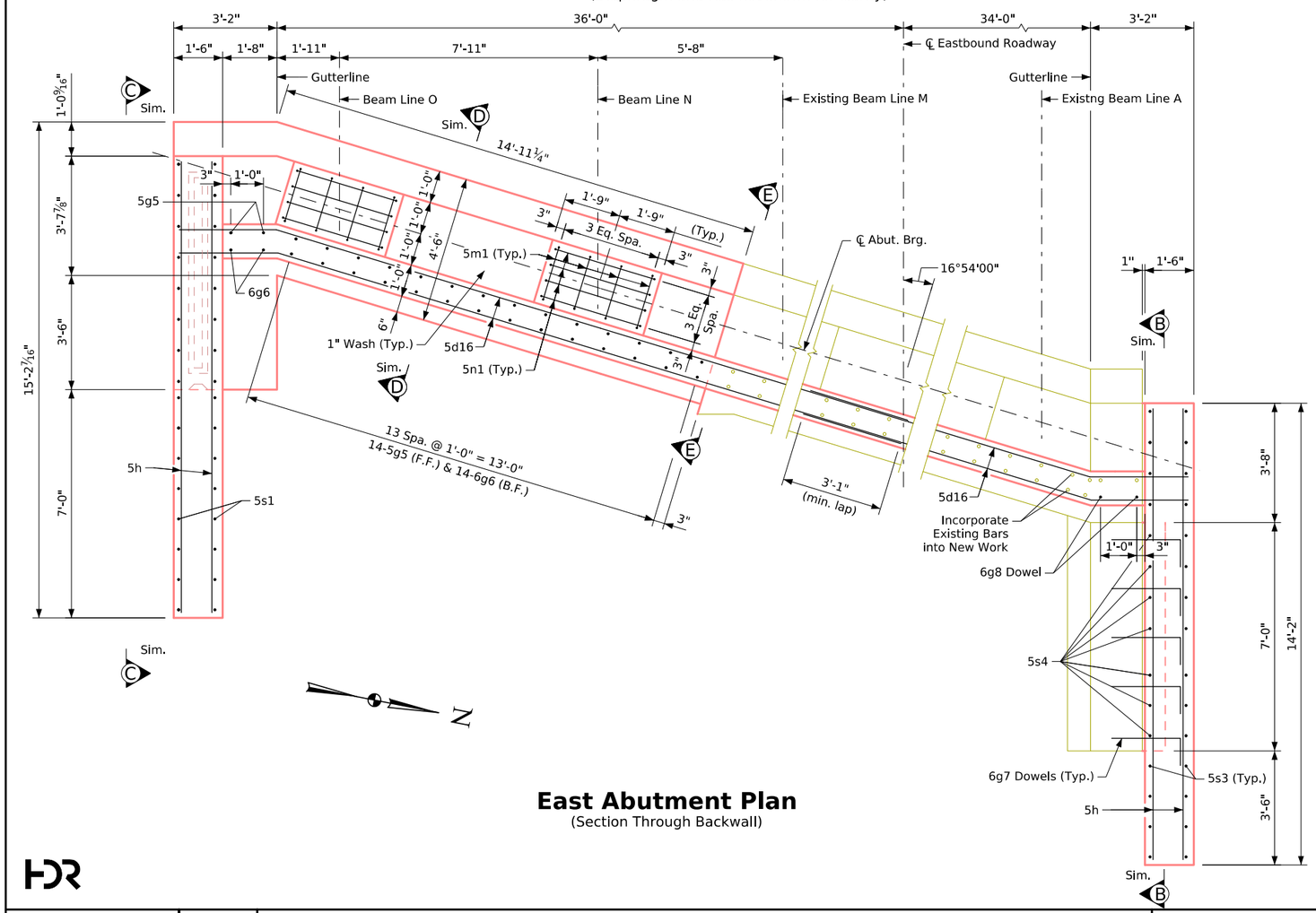

East Abutment Plan

(Section Through Backwall)

Notes:
For rear elevation of abutment diaphragm, see Design Sheet No. 13.
For Abutment Notes, see Design Sheet No. 14.
For Section D-D, See Design Sheet No. 14.
For View C-C and Section B-B, see Design Sheet No. 16.

Design For Widening & Redecking of 16°54'00" Skew (LA)

188'-4" x 70'-0" Pretensioned Prestressed Concrete Beam Bridge

59'-9 1/2" End Spans 68'-9" Interior Span

East Abutment Details

STA. 1173+91.29, 42.00' Rt. (℄ I-80 Existing) Turn-in Date: October 2025

Polk County

IOWA DEPARTMENT OF TRANSPORTATION

Design No. 326 Design Sheet No. 15 of 47 FHWA No. 041970

FILE NO. 32061	ENGLISH	DESIGN TEAM TLP/KD/TMS	POLK COUNTY	PROJECT NUMBER IM-NHS-080-4(088)139--03-77	SHEET NUMBER V.15

4:42:08 PM 9/16/2025 ESORENS pw:\\pwhdruscen01:HDR_US_Central_01\Documents\IADOT\IDOT-NEMM_Stage_5B_FinalBrDes\6.0_CAD_BIM\6.2_WIP\Bridge\PPCB Design No. 326 - I-80EB over Four Mile Creek

Bench Mark No. Feno0200, 1-Meter Rod Monument, Sta. 1183+18.58, 845.82' Rt., Elev. 851.56

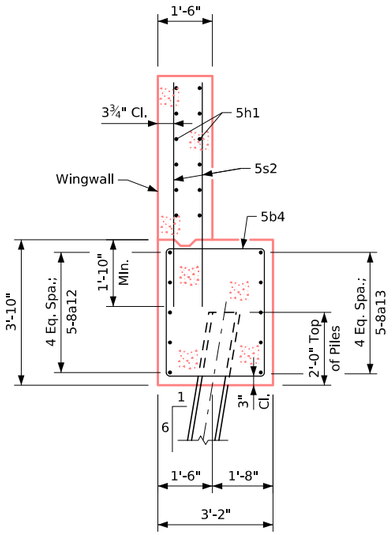

Section D-D

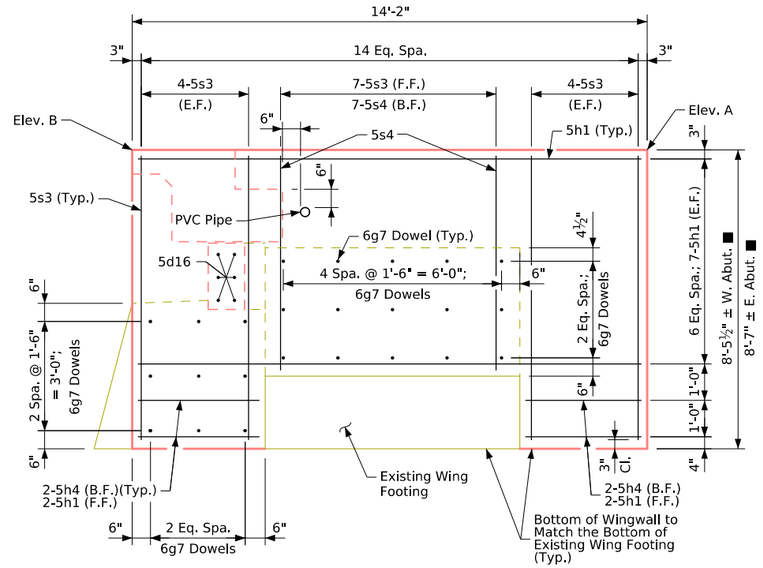

Section B-B

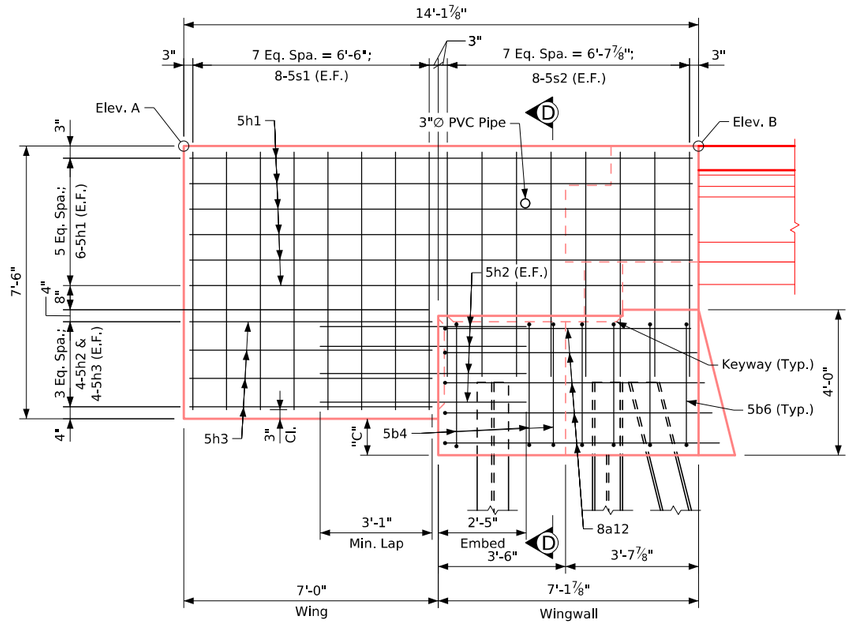

View C-C

(Footing 8a Bars not shown for clarity)

Notes:
■ Field Verify
Plug 3"Ø PVC pipe with expanding foam prior to backfilling behind abutments.

Table of Elevations			
Location	Elev. A	Elev. B	Dim "C"
Northwest Wing	840.26	840.32	-
Southwest Wing	840.10	840.16	10"
Northeast Wing	841.22	841.16	-
Southeast Wing	841.06	841.00	11¼"

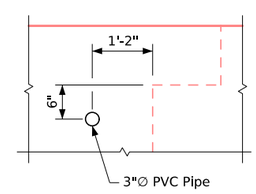

PVC Pipe Location

Note:
Plug 3"Ø PVC Pipe with expanding foam prior to backfilling behind abutments.

Notes:
For locations of Section B-B and View C-C, see Design Sheet No. 15.

Design For Widening & Redecking of 16°54'00" Skew (LA)

188'-4" x 70'-0" Pretensioned Prestressed Concrete Beam Bridge

59'-9 1/2" End Spans 68'-9" Interior Span

Abutment Details

STA. 1173+91.29, 42.00' Rt. (℄ I-80 Existing) Turn-in Date: October 2025

Polk County

IOWA DEPARTMENT OF TRANSPORTATION

Design No. 326 Design Sheet No. 16 of 47 FHWA No. 041970

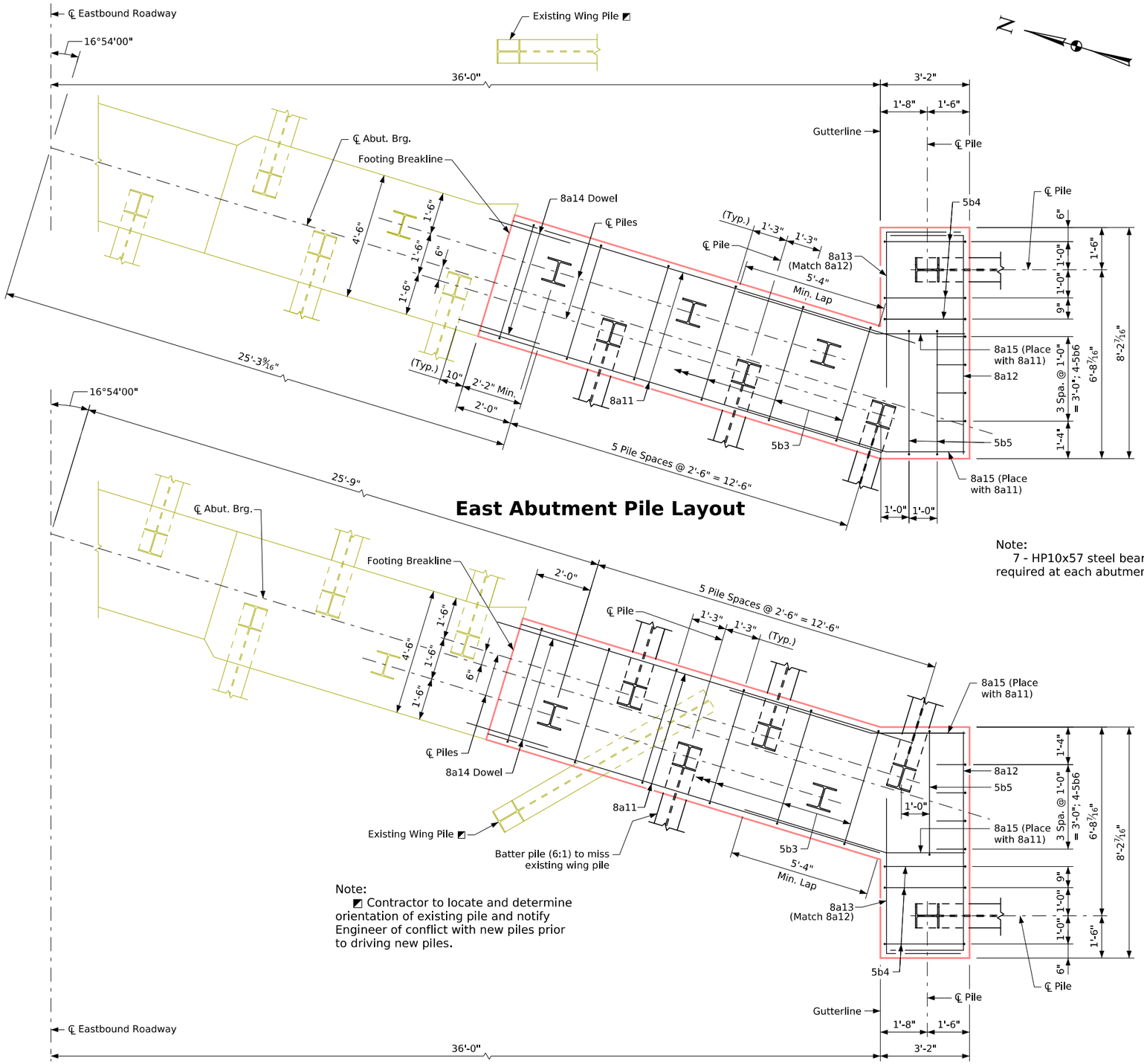

East Abutment Pile Layout

Note:
7 - HP10x57 steel bearing piling required at each abutment.

Note:
◩ Contractor to locate and determine orientation of existing pile and notify Engineer of conflict with new piles prior to driving new piles.

West Abutment Pile Layout

W. Abut. Pile Notes:

The contract length of 45 feet for the west abutment piles is based on a non-cohesive soil classification, a total factored axial load per pile (Pu) of 120 Kips, and a geotechnical resistance factor (phi) of 0.55 for soil and 0.7 for rock end bearing. Abutment piles also were designed for a factored tension force of 5 Kips.

The nominal axial bearing resistance for construction control was determined from a non-cohesive soil classification and a geotechnical resistance factor (PHI) of 0.55 for soil and 0.7 for rock end bearing. Piles are assumed to be driven from a start elevation at the bottom of footing.

The required nominal axial bearing resistance for west abutment piles is 90 tons at end of drive or retap. The pile contract length shall be driven as per plan unless piles reach refusal. In no case shall a pile be embedded less than 15 feet. Construction control requires a weap analysis with bearing graph.

E. Abut. Pile Notes:

The contract length of 45 feet for the east abutment piles is based on a cohesive soil classification, a total factored axial load per pile (Pu) of 120 Kips, and a geotechnical resistance factor (phi) of 0.65 for soil and 0.7 for rock end bearing. Abutment piles also were designed for a factored tension force of 5 Kips.

The nominal axial bearing resistance for construction control was determined from a cohesive soil classification and a geotechnical resistance factor (phi) of 0.77 for soil and 0.7 for rock end bearing. Piles are assumed to be driven from a start elevation at the bottom of footing.

The required nominal axial bearing resistance for abutment piles is 90 tons at end of drive or retap. The pile contract length shall be driven as per plan unless piles reach refusal. In no case shall a pile be embedded less than 10 feet. Construction control requires a weap analysis with bearing graph.

Abutment Concrete Quantity

Location	W. Abut.	E. Abut.
Footing Extension and Steps	12.0	12.0
Backwall	4.6	4.6
Wingwalls	11.4	11.4
Total (Cu. Yds.)	28.0	28.0

Note:
Concrete quantitiesare included on the Summary Quantities sheet.

Design For Widening & Redecking of 16°54'00" Skew (LA)

188'-4" x 70'-0" Pretensioned Prestressed Concrete Beam Bridge

59'-9 1/2" End Spans 68'-9" Interior Span

Abutment Details

STA. 1173+91.29, 42.00' Rt. (℄ I-80 Existing) Turn-in Date: October 2025

Polk County

IOWA DEPARTMENT OF TRANSPORTATION

Design No. 326 Design Sheet No. 17 of 47 FHWA No. 041970

HDR

FILE NO. 32061	ENGLISH	DESIGN TEAM TLP/KD/TMS	POLK COUNTY	PROJECT NUMBER IM-NHS-080-4(088)139--03-77	SHEET NUMBER V.17

4:42:09 PM 9/16/2025 ESORENS pw:\\pwhdruscen01:HDR_US_Central_01\Documents\IADOT\IDOT-NEMM_Stage_5B_FinalBrDes\6.0_CAD_BIM\6.2_WIP\Bridge\PPCB Design No. 326 - I-80EB over Four Mile Creek

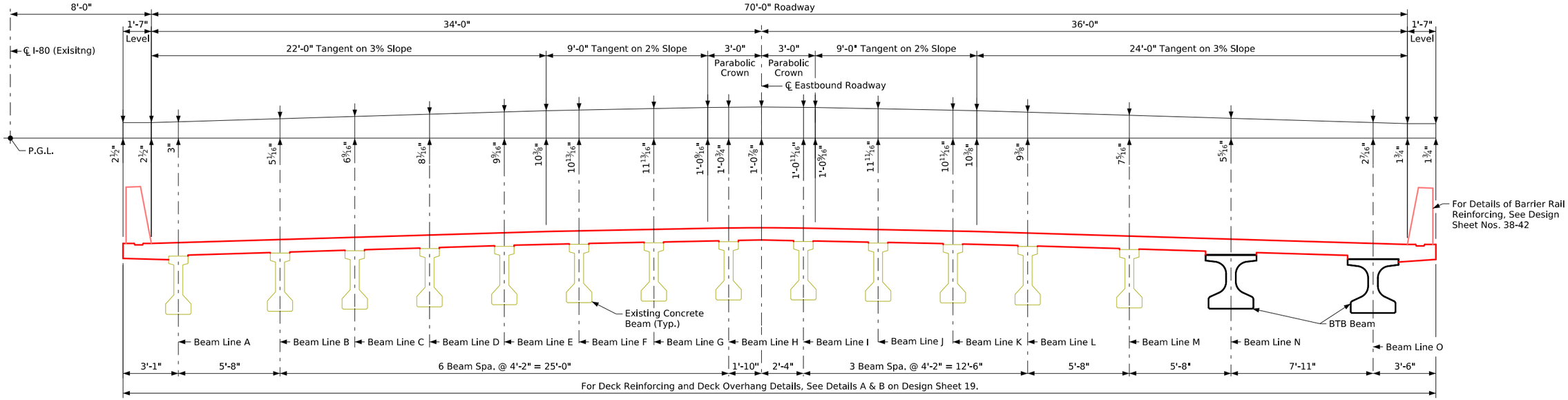

Deck Area = 52.6 Sq. Ft.
Deck area does not include the nominal haunch.

Typical Section

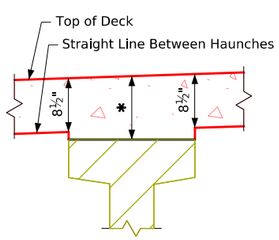

Interior Beams

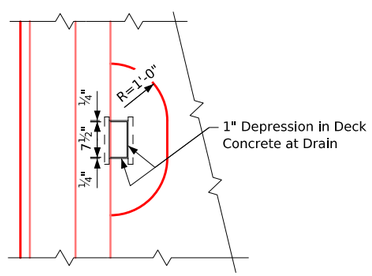

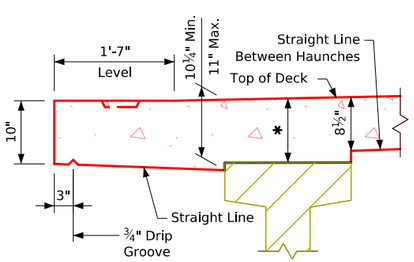

Exterior Beams

Typical Deck and Haunch Detail

(Shown at existing beams, Similiar at new beams)

* For Deck Thickness Over Beams See "Haunch And Camber Details" on Design Sheet No. 22.

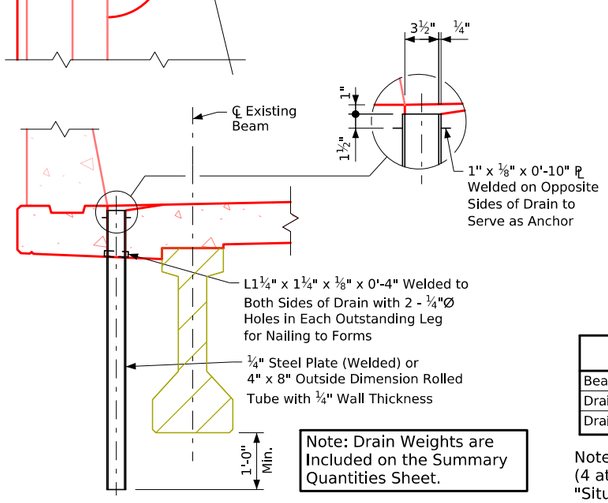

Drain Details

(Shown at existing beams, Similiar at new beams)

Note: Drain Weights are Included on the Summary Quantities Sheet.

Data for One Drain		
Beam Size	Existing Beam	BTB
Drain Weight (lbs.)	96	92
Drain Length (ft.)	5'-0 3/4"	4'-9 3/4"

Note: Drains are to be galvanized. 8 Drains required (4 at Existing Beams and 4 at BTB Beams). See "Situation Plan" on Design Sheet No. 5 for location. Weight of drains is included in the quantity for "Structural Steel". Weight is based on rolled tube.

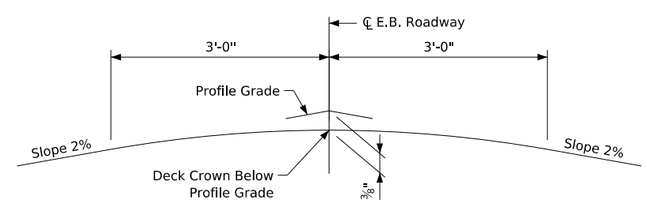

Parabolic Crown Template

Superstructure Notes:

The bridge deck as shown includes 3/4" integral wearing surface.

The abutment diaphragm concrete is to be placed monolithically with the bridge deck.

Cost of all resilient joint filler material is to be included in the price bid for "Structural Concrete (Bridge)".

Forms for the deck and barrier rail are to be supported by the prestressed concrete beams.

Clear distance from face of concrete to near reinforcing bar shall be 2" unless otherwise noted or shown.

All deck reinforcing is to be wired in place and adequately supported before concrete is placed.

Top transverse reinforcing steel is to be parallel to and 2 3/4" clear below top of deck. Bottom transverse reinforcing steel is to be parallel to and 1 1/2" clear above bottom of the deck. Top and bottom reinforcing steel is to be supported by individual bar chairs spaced at not more than 3'-0" centers longitudinally and transversely, or by continuous rows of bar high chairs or deck bolsters spaced 4'-0" apart. I.M. 451.01 requirements shall apply for bar chairs, bar high chairs, and deck bolsters.

Design For Widening & Redecking of 16°54'00" Skew (LA)

188'-4" x 70'-0" Pretensioned Prestressed Concrete Beam Bridge

59'-9 1/2" End Spans — 68'-9" Interior Span

Superstructure Details

STA. 1173+91.29, 42.00' Rt. (℄ I-80 Existing) — Turn-in Date: October 2025

Polk County

IOWA DEPARTMENT OF TRANSPORTATION

Design No. 326 — Design Sheet No. 18 of 47 — FHWA No. 041970

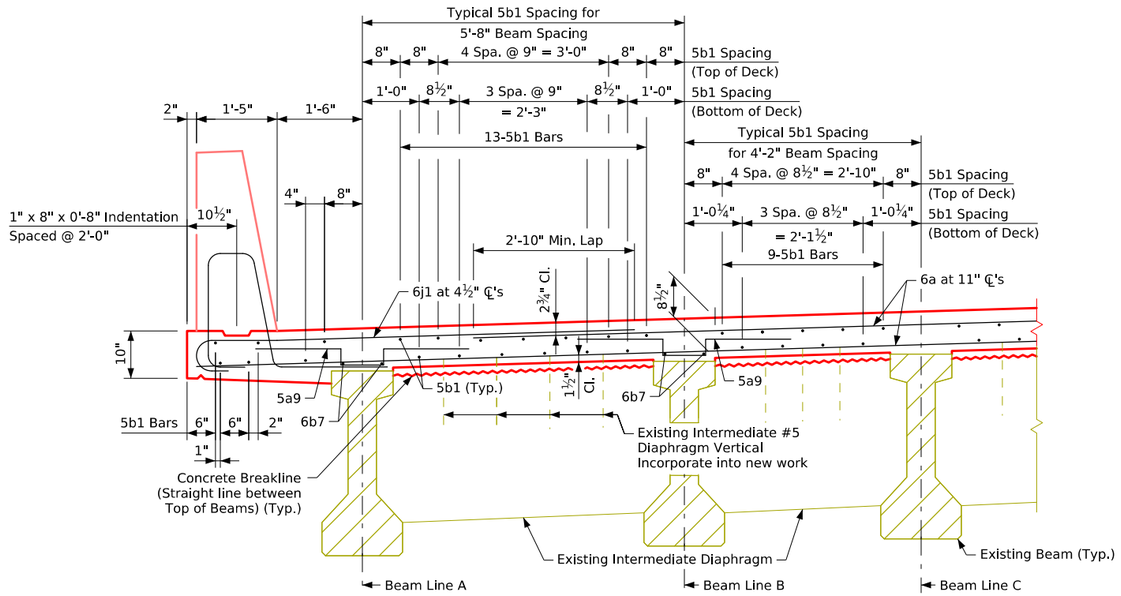

Detail A Near Mid Span

◐ Temporary bracing to be used between existing Beam Line M and Beam Line N. See Steel Diaphragm Details sheet. There are no permanent intermediate diaphragms between existing Beam Line M and Beam Line N.

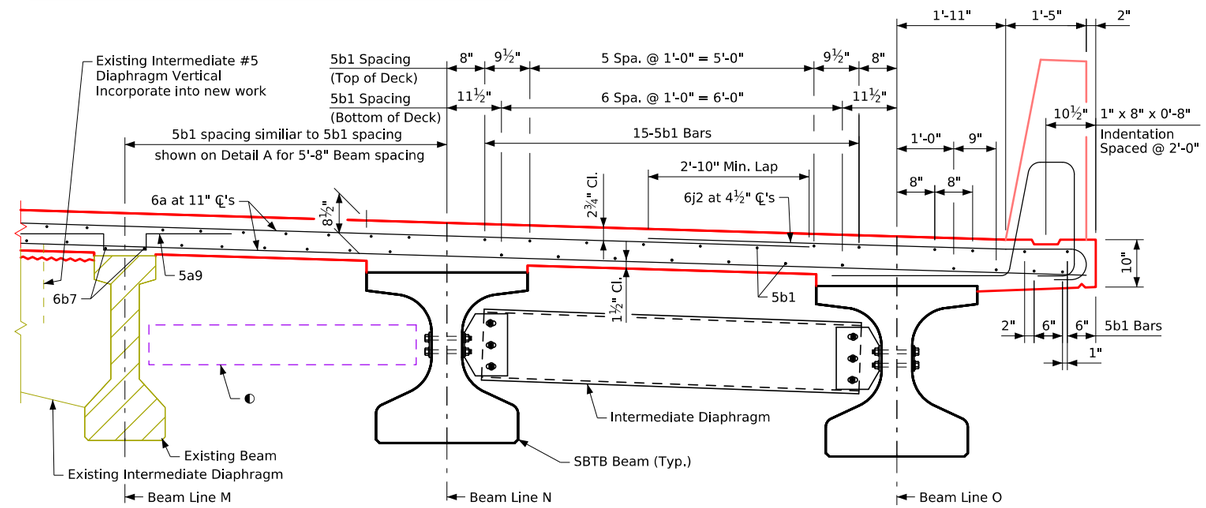

Detail B Near Mid Span

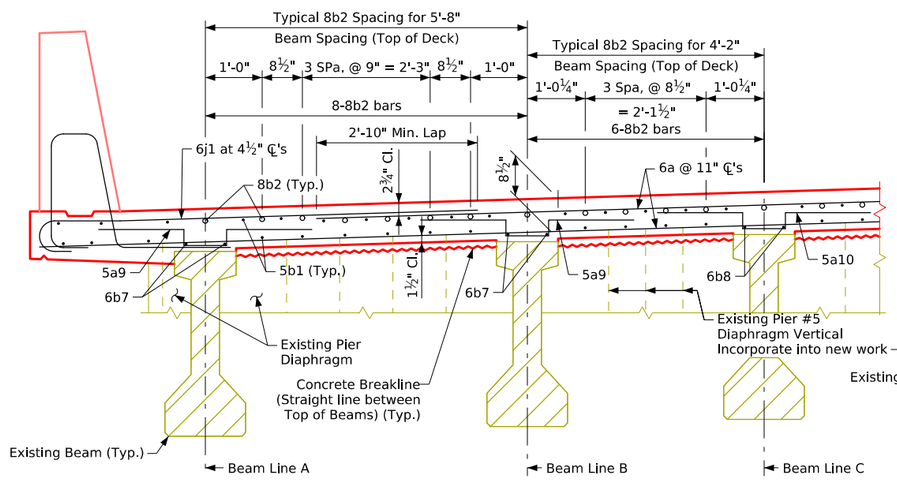

Detail A Near Pier

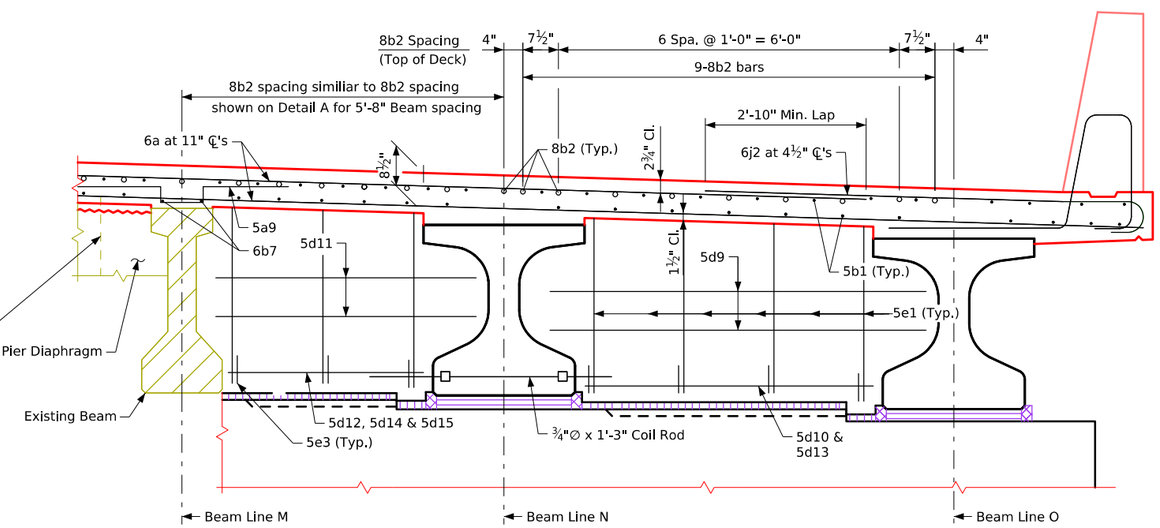

Detail B Near Pier

Notes:
For intermediate diaphragms, see Design Sheet Nos. 27 and 28.
For 5a9, 5a10, 6b7, and 6b8 bar spacing, see Design Sheet No. 22.

Design For Widening & Redecking of 16°54'00" Skew (LA)

188'-4" x 70'-0" Pretensioned Prestressed Concrete Beam Bridge

59'-9 1/2" End Spans — 68'-9" Interior Span

Superstructure Details

STA. 1173+91.29, 42.00' Rt. (℄ I-80 Existing) — Turn-in Date: October 2025

Polk County

IOWA DEPARTMENT OF TRANSPORTATION

Design No. 326 — Design Sheet No. 19 of 47 — FHWA No. 041970

FILE NO. 32061	ENGLISH	DESIGN TEAM KD/DS/TMS	POLK COUNTY	PROJECT NUMBER IM-NHS-080-4(088)139--03-77	SHEET NUMBER V.19

8:43:40 AM 9/17/2025 ESORENS pw:\\pwhdruscen01:HDR_US_Central_01\Documents\IADOT\IDOT-NEMM_Stage_5B_FinalBrDes\6.0_CAD_BIM\6.2_WIP\Bridge\PPCB Design No. 326 - I-80EB over Four Mile Creek

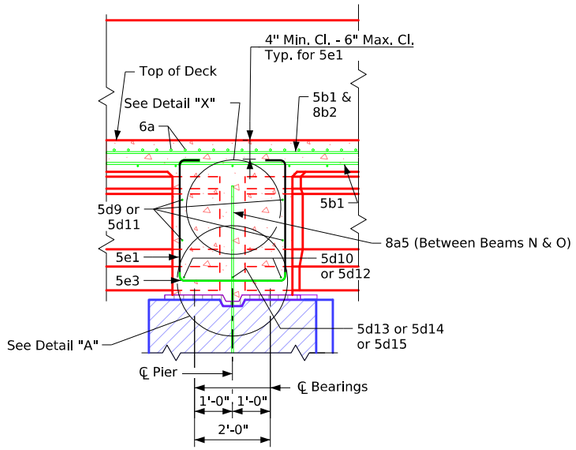

Section A-A

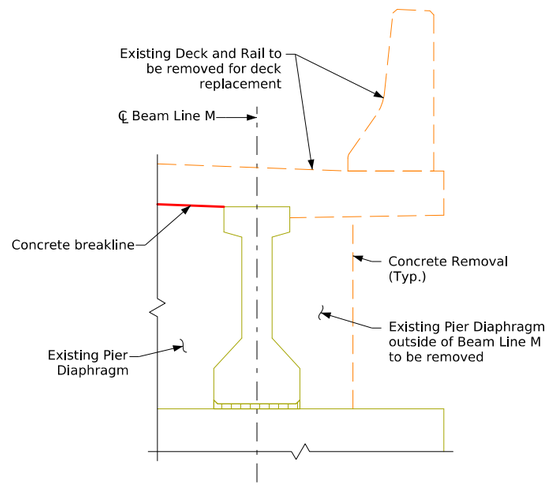

Section B-B

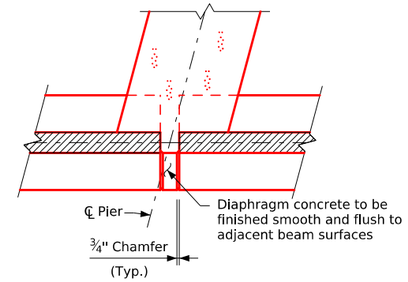

Detail "B"

Part Plan at Ends of Pier Diaphragm

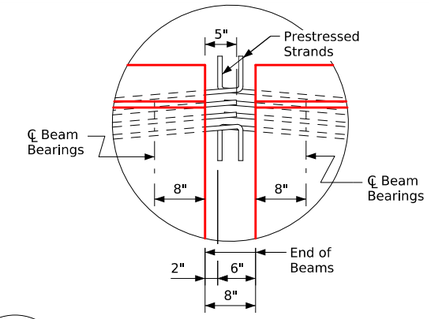

Detail "X"

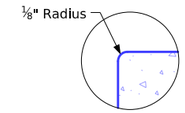

Detail "C"

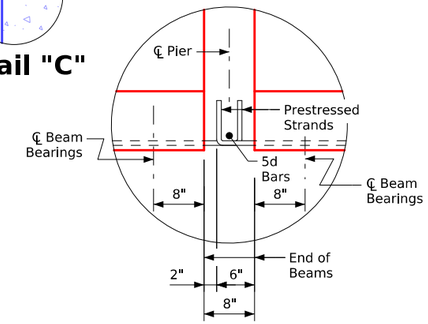

Detail "A"

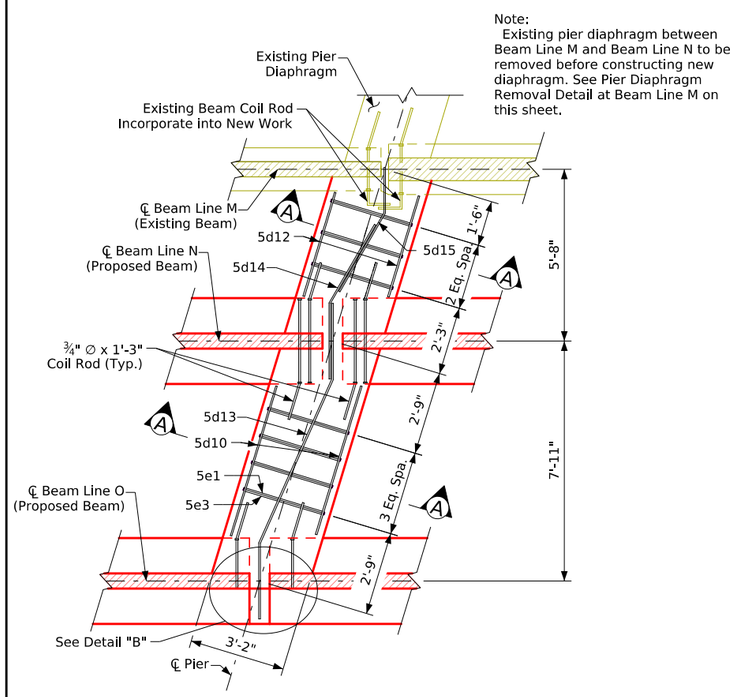

Note:
Existing pier diaphragm between Beam Line M and Beam Line N to be removed before constructing new diaphragm. See Pier Diaphragm Removal Detail at Beam Line M on this sheet.

Part Section at Pier

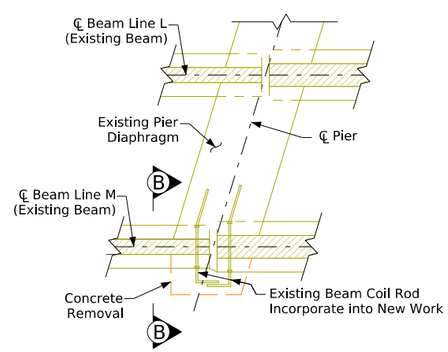

Pier Diaphragm Removal at Beam Line M

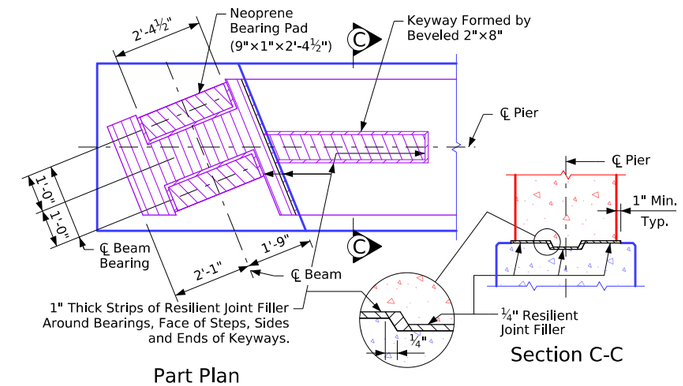

Part Plan

Section C-C

Top of Fixed Pier Details

Note:
The 5d15 bar shall be set as a dowel in a drilled hole. Hole is to be 10" deep. The dowel shall be installed in accordance with the manufacturer's recommendations and shall use a polymer grout system in accordance with Article 2301.03, E, of the Standard Specifications.
The price bid for "High Performance Structural Concrete" shall include the cost of setting bar as dowel in the pier diaphragm.
Locate existing reinforcing prior to installation of dowel bars. Dowel bars may be shifted slightly to avoid existing reinforcing as needed.

Design For Widening & Redecking of 16°54'00" Skew (LA)

188'-4" x 70'-0" Pretensioned
Prestressed Concrete Beam Bridge

59'-9 1/2" End Spans 68'-9" Interior Span

Pier Diaphragm Details

STA. 1173+91.29, 42.00' Rt. (℄ I-80 Existing) Turn-in Date: October 2025

Polk County

IOWA DEPARTMENT OF TRANSPORTATION

Design No. 326 Design Sheet No. 20 of 47 FHWA No. 041970

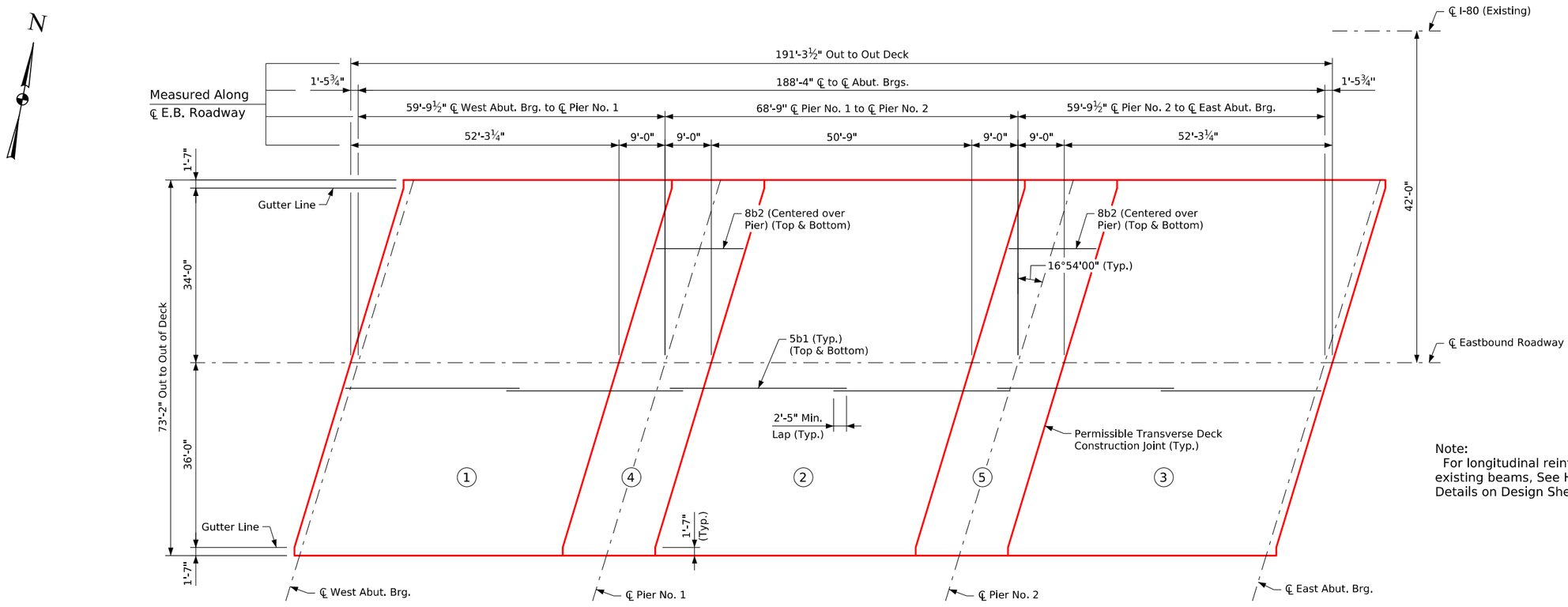

Note:
For longitudinal reinforcing at haunch over existing beams, See Haunch Reinforcing Details on Design Sheet No. 22.

Concrete Placement Diagram & Longitudinal Reinforcing Layout

(Longitudinal haunch reinforcing not shown for clarity)

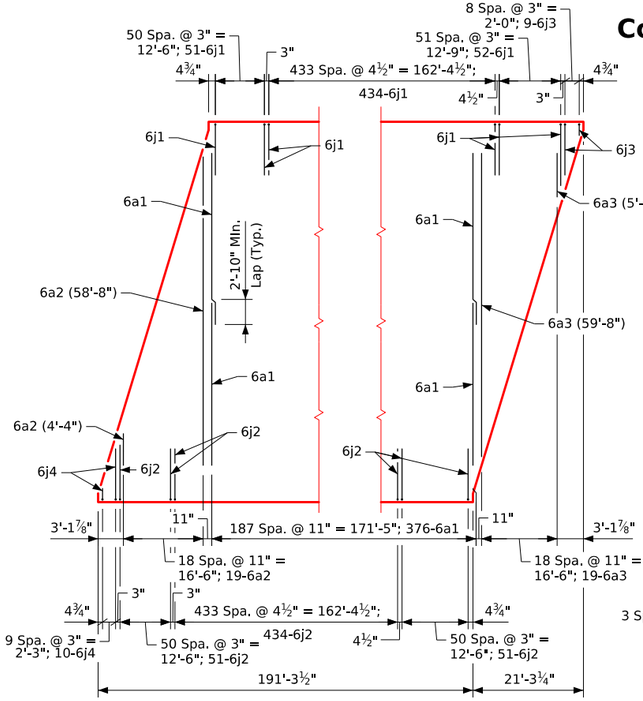

Top Transverse Reinforcing Layout

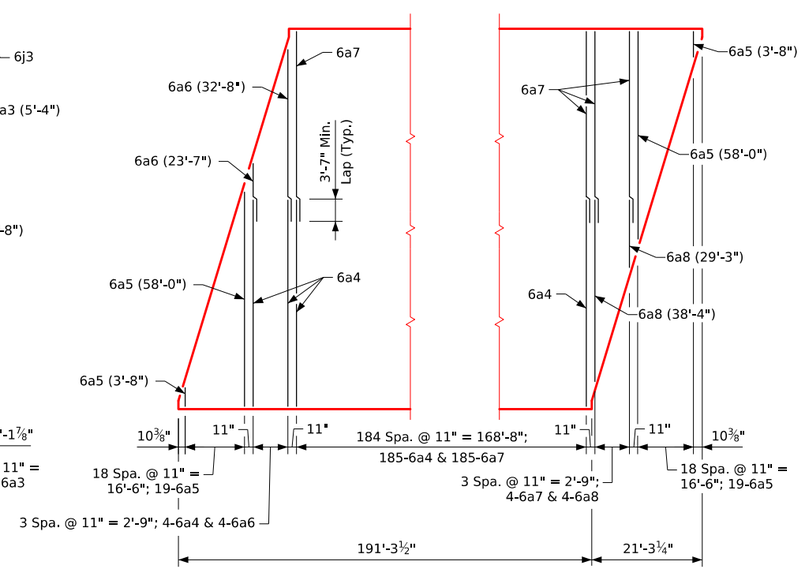

Bottom Transverse Reinforcing Layout

Notes:
Concrete deck shall be placed in sections and sequences indicated. (An approved alternate procedure is to place the concrete deck in one continuous pour beginning at one end of the bridge.) Alternate procedures for placing deck concrete may be submitted for approval together with a statement of the proposed method and evidence that the Contractor possesses the necessary equipment and facilities to accomplish the required results. The Bridge Engineer shall review any alternate procedures. The cost of any additional analysis and plan modifications shall be paid for by the Contractor. The Engineer shall determine if a retarding admixture is required to maintain plasticity of the concrete deck during placement.
Deck concrete sections shall cure for a minimum of 48 hours and shall achieve a minimum strength of 75% of the 28 day deck concrete strength prior to removing deck headers and beginning an adjacent pour.

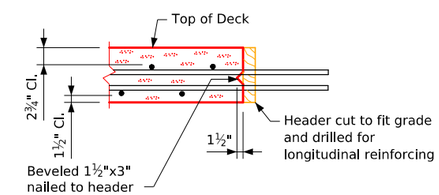

Permissible Transverse Deck Construction Joint

Design For Widening & Redecking of 16°54'00" Skew (LA)

188'-4" x 70'-0" Pretensioned Prestressed Concrete Beam Bridge

59'-9 1/2" End Spans — 68'-9" Interior Span

Deck Plan & Reinforcing

STA. 1173+91.29, 42.00' Rt. (℄ I-80 Existing) — Turn-in Date: October 2025

Polk County

IOWA DEPARTMENT OF TRANSPORTATION

Design No. 326 — Design Sheet No. 21 of 47 — FHWA No. 041970

FILE NO. 32061	ENGLISH	DESIGN TEAM KD/DS/TMS	POLK COUNTY	PROJECT NUMBER IM-NHS-080-4(088)139--03-77	SHEET NUMBER V.21

4:42:12 PM 9/16/2025 ESORENS pw:\\pwhdruscen01:HDR_US_Central_01\Documents\IADOT\IDOT-NEMM_Stage_5B_FinalBrDes\6.0_CAD_BIM\6.2_WIP\Bridge\PPCB Design No. 326 - I-80EB over Four Mile Creek

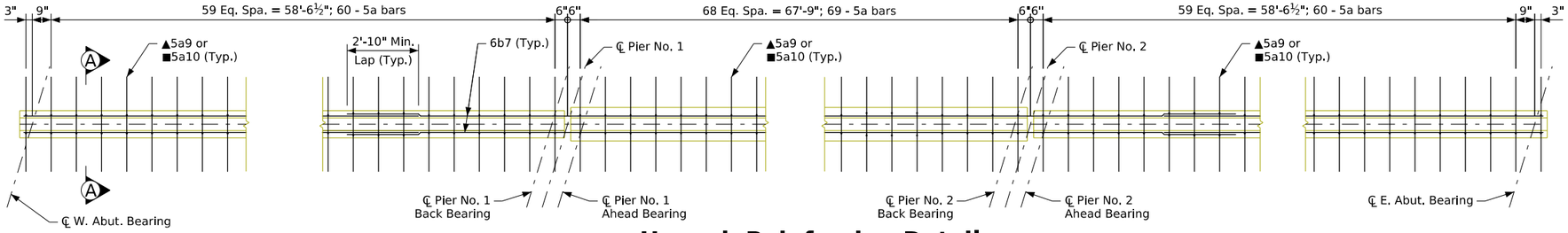

Haunch Reinforcing Detail

(Beam Lines A, B, H, I, L & M)

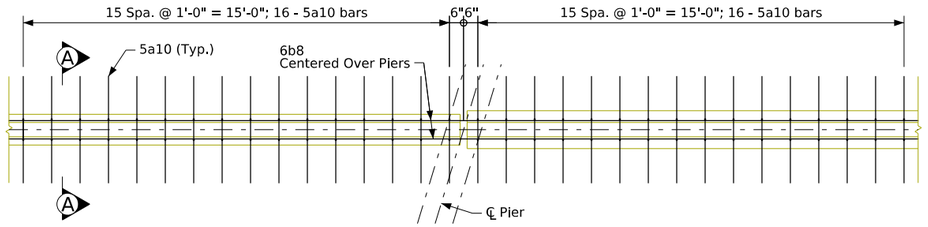

Haunch Reinforcing Detail

(Beam Lines C-G & J-K)

Note:
▲5a9 bars for Beam Lines A, B, L & M
■5a10 bars for Beam Lines H & I

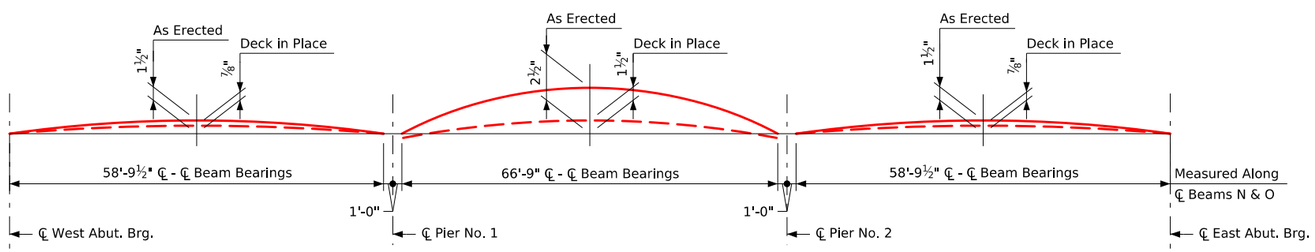

Beam N & O Camber Data

(For New SBTB Beams Only)

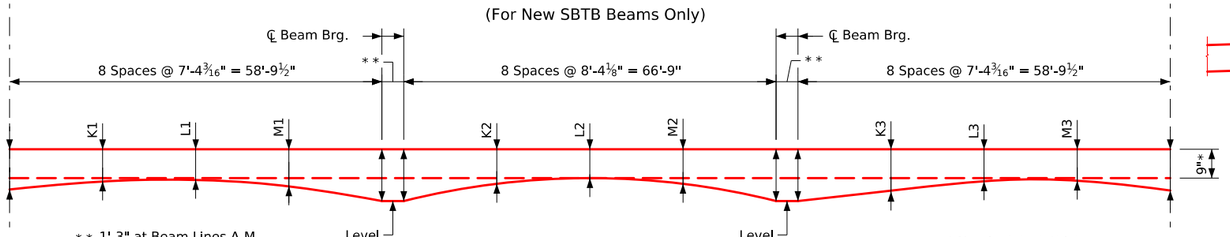

** 1'-3" at Beam Lines A-M
2'-0" at Beam Lines N & O

* Nominal deck thickness at beams includes 8 ½" deck + ½" haunch

Deck Thickness at Beams (T)

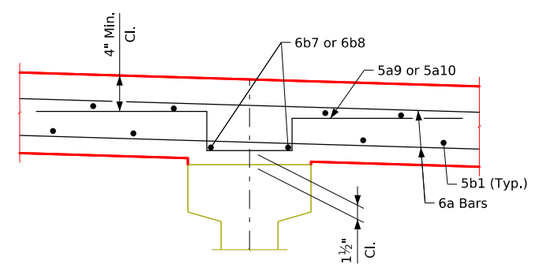

Section A-A

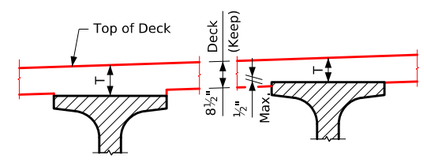

Deck Thickness Details

Note:
The Deck Thickness (T) at beams is based on the anticipated beam camber and deflections. These values are used by the Designer to set beam elevations and estimate concrete quantities. Refer to the Haunch Data Details Sheet for additional information to aid the Contractor in setting the field haunches required for construction.

Deck Thickness at Beams (T)

Beam Line	℄ West Abut. Brg.	K1	L1	M1	℄ Pier No. 1 Bearings		K2	L2	M2	℄ Pier No. 2 Bearings		K3	L3	M3	℄ East Abut. Brg.
A-B	11 1/16"	10 9/16"	10 3/16"	10½"	11 7/16"	11 7/16"	10½"	10 3/16"	10½"	11 7/16"	11 7/16"	10 9/16"	10 3/16"	10 9/16"	11 1/16"
C-E	9¾"	9¼"	9 3/16"	9½"	10¼"	10¼"	9½"	9 5/16"	9½"	10¼"	10¼"	9½"	9 3/16"	9¼"	9¾"
F-G & J-K	9 9/16"	9 1/16"	9"	9 5/16"	10 1/16"	10 1/16"	9⅜"	9⅛"	9⅜"	10 1/16"	10 1/16"	9 5/16"	9"	9 1/16"	9 9/16"
H-I	10"	9½"	9 7/16"	9¾"	10½"	10½"	9¾"	9 9/16"	9¾"	10½"	10½"	9¾"	9 7/16"	9½"	10"
L-M	11"	10¼"	10⅛"	10 7/16"	11⅜"	11⅜"	10 7/16"	10⅛"	10 7/16"	11⅜"	11⅜"	10½"	10⅛"	10¼"	11"
N-O	9½"	9 3/16"	9 5/16"	9 15/16"	10 15/16"	11"	9⅞"	9½"	9 13/16"	10 15/16"	11"	10"	9⅜"	9¼"	9½"

Design For Widening & Redecking of 16°54'00" Skew (LA)

188'-4" x 70'-0" Pretensioned Prestressed Concrete Beam Bridge

59'-9 1/2" End Spans — 68'-9" Interior Span

Superstructure Details

STA. 1173+91.29, 42.00' Rt. (℄ I-80 Existing) — Turn-in Date: October 2025

Polk County

IOWA DEPARTMENT OF TRANSPORTATION

Design No. 326 — Design Sheet No. 22 of 47 — FHWA No. 041970

FILE NO. 32061	ENGLISH	DESIGN TEAM KD/DS/TMS	POLK COUNTY	PROJECT NUMBER IM-NHS-080-4(088)139--03-77	SHEET NUMBER V.22

4:42:12 PM 9/16/2025 ESORENS pw:\\pwhdruscen01:HDR_US_Central_01\Documents\IADOT\IDOT-NEMM_Stage_5B_FinalBrDes\6.0_CAD_BIM\6.2_WIP\Bridge\PPCB Design No. 326 - I-80EB over Four Mile Creek

Concrete Placement Quantities

Location	Quantity
Section 1, Deck & Abut. Diaph.	124.1
Section 2, Deck	104.1
Section 3, Deck & Abut. Diaph.	124.1
Section 4, Deck & Pier Diaph.	43.2
Section 5, Deck & Pier Diaph.	43.2
Total (Cu. Yds.)	438.7

Note:
Concrete and reinforcing steel quantities are included on the Summary Quantities Sheet.

Epoxy Coated Reinforcing Steel - Deck, Abut. Footing & Abut. Diaph.

Epoxy Coated Reinforcing

Bar	Location	Shape	No.	Length	Weight
6a1	Deck, Transv. Top		376	31'-6"	17,790
6a2	Deck, Transv. Top		19	Varies	899
6a3	Deck, Transv. Top		19	Varies	927
6a4	Deck, Transv. Bott.		189	41'-1"	11,663
6a5	Deck, Transv. Bott.		38	Varies	1,760
6a6	Deck, Transv. Bott.		4	Varies	169
6a7	Deck, Transv. Bott.		189	35'-5"	10,054
6a8	Deck, Transv. Bott.		4	Varies	203
5a9	Haunch, Transv.		756	4'-6"	3,548
5a10	Haunch, Transv.		602	4'-5"	2,773
8a11	Abut. Extension Longit.		26	14'-10"	1,030
8a12	Abut. Extension, Longit.		10	Varies	269
8a13	Abut. Extension, Longit.		10	8'-7"	229
8a14	Abut. Extension Dowel		16	3'-0"	128
8a15	Abut. Extension, Longit.		26	8'-5"	584
5b1	Deck, Longit. Top & Bott.		948	33'-11"	33,536
8b2	Deck, Longit. Top at Piers		164	17'-8"	7,736
5b3	Abut. Extension Hoops		12	15'-1"	189
5b4	Abut. Extension Hoops		6	13'-6"	84
5b5	Abut. Extension Hoops		3	15'-3"	48
5b6	Abut. Extension Hoops		8	5'-7"	47
6b7	Haunch, Longit.		72	33'-11"	3,668
6b8	Haunch, Longit.		14	31'-6"	662
5d1	Abut. Diaph., Longit.		32	39'-7"	1,321
5d2	Abut. Diaph., Longit.		16	4'-9"	79
5d3	Abut. Diaph., Longit.		80	3'-2"	264
5d4	Abut. Diaph. Longit.		8	3'-10"	32
5d5	Abut. Diaph., Longit.		8	5'-3"	44
5d6	Abut. Diaph., Ends		16	5'-0"	83
5d9	Pier Diaph., Longit.		8	7'-4"	61
5d10	Pier Diaph., Longit.		4	5'-1"	21
5d11	Pier Diaph., Longit.		8	4'-10"	40
5d12	Pier Diaph., Longit.		4	3'-4"	14
5d13	Pier Diaph., Longit.		2	10'-11"	23
5d14	Pier Diaph., Longit.		2	5'-6"	11
5d15	Pier Diaph., Longit.		2	4'-6"	9
5d16	Abut. Backwall, Longit.		24	41'-0"	1,026
5e1	Pier Diaph., Hoops		14	10'-4"	151
5e3	Pier Diaph., Ties		14	3'-11"	57
5g1	Abut. Diaph., Hoops		144	4'-11"	738
5g2	Abut. Diaph., Hoops		96	6'-4"	634
5g3	Abut. Diaph., Hoops		16	5'-0"	83
5g4	Abut. Diaph., Vertical		256	4'-0"	1,068
5g5	Abut. Backwall, Vertical		33	3'-0"	103
6g6	Abut. Backwall, Vertical		33	3'-3"	161
6g7	Wing, Dowels		48	3'-2"	228
6g8	Abutment Backwall, Dowel		4	2'-2"	13
5h1	Wing Wall, Horiz.		56	13'-9"	803
5h2	Wing Wall, Horiz.		16	5'-8"	95
5h3	Wing Wall, Horiz.		16	6'-8"	111
5h4	Wing Wall, Horiz.		8	3'-2"	26
6j1	Top of Deck Transv. (At Rail)		537	9'-5"	7,595
6j2	Top of Deck Transv. (At Rail)		536	10'-5"	8,386
6j3	Top of Deck Transv. (At Rail)		9	Varies	82
6j4	Top of Deck Transv. (At Rail)		10	Varies	97
5m1	Abut. Pedestal, Longit.		16	5'-4"	89
5n1	Abut. Pedestal, Transv.		16	6'-10"	114
5s1	Wing Wall, Vert.		32	7'-2"	239
5s2	Wing Wall, Vert.		32	6'-3"	209
5s3	Wing Wall, Vert.		46	8'-2"	392
5s4	Wing Wall, Vert.		14	6'-2"	90
			Epoxy Coated Reinforcing Steel Total Weight (lbs.)		122,588

Bent Bar Details

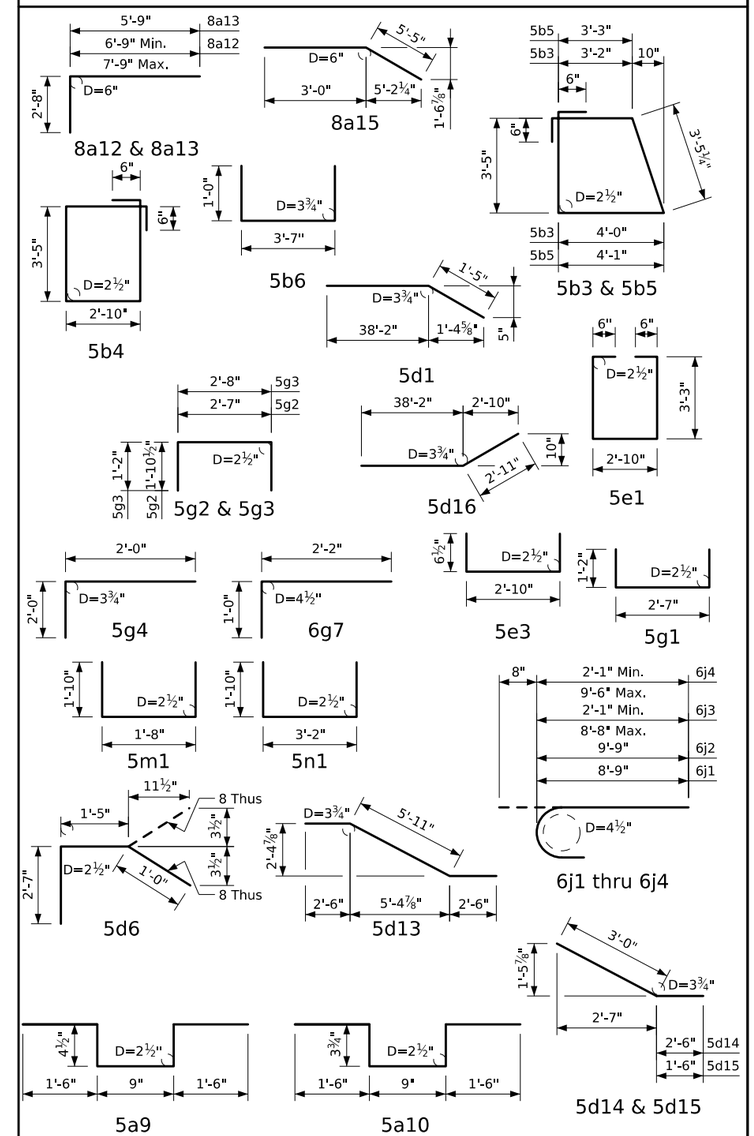

Note: All dimensions are out to out. D= Pin diameter

Design For Widening & Redecking of 16°54'00" Skew (LA)

188'-4" x 70'-0" Pretensioned Prestressed Concrete Beam Bridge

59'-9 1/2" End Spans 68'-9" Interior Span

Superstructure Details

STA. 1173+91.29, 42.00' Rt. (℄ I-80 Existing) Turn-in Date: October 2025

Polk County

IOWA DEPARTMENT OF TRANSPORTATION

Design No. 326 Design Sheet No. 23 of 47 FHWA No. 041970

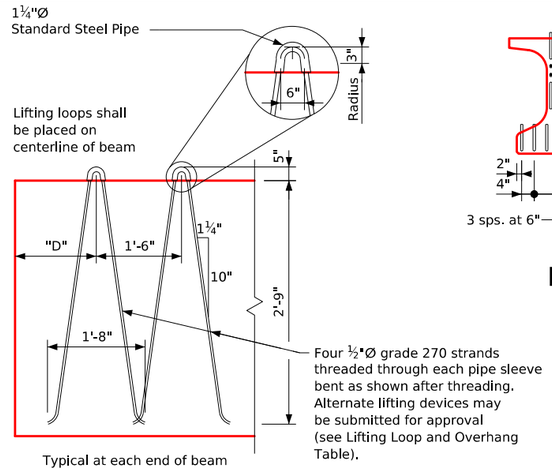

Lifting Loop Detail

Lifting Loop and Overhang Table				
Beams	Lifting Loops Each End	# of Strands Per Loop	D	Beam Overhang (ft.)
SBTB58.79, SBTB66.75	1	4	2'-0"	**

** In accordance with Article 2407.03, K of the Standard Specifications.

Lifting loops shall carry loads equally.

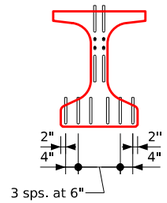

The top and bottom for 2 rows or the top and 3rd rows of deflected strands are to be cut with 1'-2" projections which are to be shop bent as shown. The second row is to be cut with a 5" projection and the remaining top deflected strands in rows 4 and below are to be cut flush with beam face. Six bottom strands are to be cut with 1'-6" projections which are to be shop bent as shown. The remaining bottom strands are to be cut off reasonably flush with the concrete.

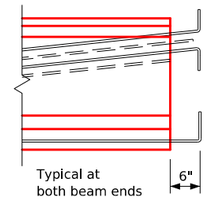

Strand Projection at Beam Ends When Embedded in Concrete End Diaphragms

Design Stresses:

Design stresses for the following materials are to be in accordance with AASHTO LRFD Bridge Design Specifications, Series of 2017.
Reinforcing steel in accordance with Section 5, Grade 60.
Concrete in accordance with Section 5.
Prestressing steel in accordance with Section 5, Grade 270.

Specifications:

Construction: Standard Specifications of the Iowa Department of Transportation, current series, with current applicable special provisions and supplemental specifications.
Design: AASHTO LRFD, Series of 2017 with minor modifications.

Alternate Bar Notes:

Alternate bars shown in Bent Bar Details may be used in lieu of reinforcing bars shown in bar list. No additional payment shall be made for use of alternate bars.

BTB Beam Data

BTB Beam	Span Length ℄-℄ Bearing	Overall Beam Length (L)	Concrete Strength f'ci (ksi.)	Concrete Strength f'c (ksi.)	Strand Size Dia. (in.)	Number of Strands Straight	Number of Strands Deflected	③ Total Initial Prestress (kips)	Hold Down Force (kips)	Camber (in.) ⑤ At Release	Camber (in.) ⑤ After Losses	Deflection (in.) Δ_D Immediate ① (elastic) Δ_I Steel Diaphragm	Deflection (in.) Δ_D Time ② (plastic) Δ_T Steel Diaphragm	Permissible Maximum Spacing HL-93 Loading Steel Diaphragm	Weight (tons)	Concrete (cu. yd.)	Reinforcing Steel (weight lb.)
SBTB58.79	58'-9½"	60'-1½"	4.50	5.00	0.60"	16	2	765	8.6	0.81"	1.51"	0.54"	0.14"	7'-11"	19.8	9.8	1554
SBTB66.75	66'-9"	68'-1"	5.00	5.50	0.60"	20	4	1021	14.0	1.35"	2.50"	0.90"	0.23"	7'-11"	22.4	11.1	1720

① Deflections at mid-span due to weight of deck and diaphragm. The deflections shown are for a deck (8.5") and haunch (1.5") weight of:
0.85 kips/ft. for 7'-6" beam spacing and one steel diaphragm (0.500 kips) at ℄ of span. For different deck and diaphragm weights, deflections will be directly proportional.

② Deflections due to the combined effect of creep due to weight of deck and shrinkage of deck.
Total beam deflections at ℄ of span, Δ_D , due to weight of deck and diaphragms for detailing purpose:
(A) $\Delta_D=\Delta_I+\Delta_T$ for simple span.
(B) $\Delta_D=\Delta_I+\frac{3}{4}\Delta_T$ for end spans of continuous bridge.
(C) $\Delta_D=\Delta_I+\frac{1}{2}\Delta_T$ for interior spans of continuous bridge.

③ Total initial prestress is based on 72.6% f's, f's= 270 ksi. and As= 0.217 in.^{2}.

④ Includes partial length debonded strands, see individual Beam Sheets for location and details.

⑤ Calculated design cambers are based on multipliers developed from research in Iowa.

Note: All mild reinforcing steel can be epoxy coated at Contractor's option without modification to bar length or details at no additional cost to the State.

△△ 5b1 and 6b3 bars to be epoxy coated

✱ 6b3 and 6b4 bars to be used in pairs

◑ Standard bar length was increased to satisfy the required projection into the deck.

Beam Notes:

These beams are designed for AASHTO live loads as indicated in above table with an allowance of 20 lbs. per square foot of roadway for future wearing surface.
All PPC beams shall use high performance concrete ('HPC') in accordance with the Standard Specifications.
Hold down points for deflected strands may be moved toward ends of beam a distance of 0.05 L maximum at producer's option.
All prestressing strands except lifting loop strands shall be 0.60 in. nominal diameter (nominal steel area = 0.217 in.^{2}) and conform to ASTM A416 Grade 270 Low Relaxation Strands. Minimum strand breaking strength shall be 58.6 kips.
Tops of beams are to be struck off level and finished as per Materials I.M.570.
Bearings shall be as detailed on other design sheets.
Beams to be used in bridges made continuous by the poured in place deck, are to be at least 28 days old before the deck is placed unless a shorter curing time is approved by the Bridge Engineer.
The portions of the prestressed beams that are to be embedded in the abutment and pier diaphragms shall be roughened for a distance of 10" from the beam end by sandblasting or other approved methods to provide suitable bond between the beam and the diaphragm in accordance with Article 2403.03, I, of the Standard Specifications.
All beams are to be increased in length to compensate for elastic shortening, creep and shrinkage.
For transporting, the allowable overhang is shown in the Lifting Loop and Overhang Table.
Holes must be cast in the web to accommodate the steel diaphragm attachments as detailed on the Steel Diaphragm Detail Sheet.
If sole plate is required for bearing, sole plate is to be set in forms when beam is cast and formed out below to exclude concrete as detailed on the Bearing Sheet.
If stub abutments are used, all strands at the ends of beams at stub abutments shall be cut off reasonably flush with the concrete.
Minimum concrete f'c (at 28 days) and minimum f'ci at release are located in the BTB Beam Data Table above.
Four 0.60 in. diameter strands stressed to not more than 5000 lbs. each may be used in lieu of bars 5a1 and 5a2 in the top flange.
When expansion joints are used, concrete sealer shall be applied to the prestressed beam end sections. The sealing shall be in accordance with materials I.M.570 (Fabricator Application) and I.M.491.12 (Contractor Application).

Number and exact location of coil ties to be as detailed on Design Sheet No. 27.

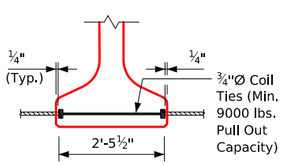

Coil Tie Detail

Bent Bar Details

Note: All bar dimensions are out to out
D = Pin diameter for bending (unless otherwise shown)
#4 Bar D= 2"
#5 Bar D= 2½"
#6 Bar D= 4½"

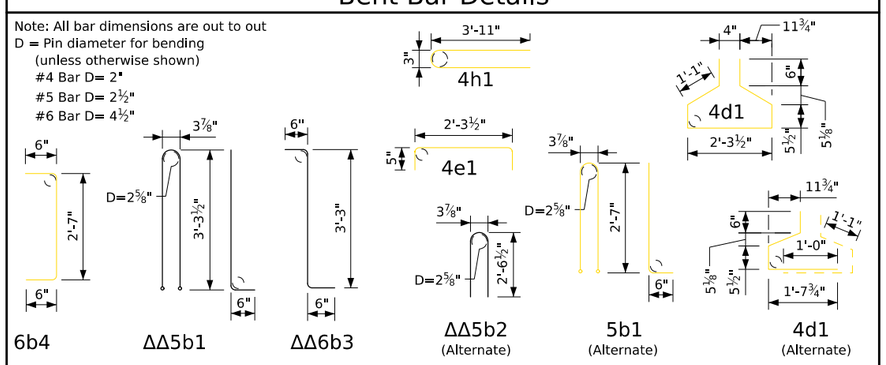

Reinforcing Bar List

	Beam Bar	Shape	SBTB58.79 No.	SBTB58.79 Length	SBTB66.75 No.	SBTB66.75 Length	Beam Bar	
	5a1		12	31'-8"	12	35'-7"	5a1	
ΔΔ ◑	5b1		47	7'-9"	57	7'-9"	5b1	ΔΔ ◑
ΔΔ ✱ ◑	6b3		36	4'-3"	36	4'-3"	6b3	ΔΔ ✱ ◑
✱	6b4		8	3'-7"	8	3'-7"	6b4	✱
	4c1		77	2'-7"	83	2'-7"	4c1	
	4d1		69	6'-5"	76	6'-5"	4d1	
	4e1		26	3'-2"	24	3'-2"	4e1	
	4h1		4	8'-0"	4	8'-0"	4h1	

Note:
For modified stirrup extensions, see "Bent Bar Details" and beam details sheets for dimensions and locations.

Design For Widening & Redecking of 16°54'00" Skew (LA)
188'-4" x 70'-0" Pretensioned
Prestressed Concrete Beam Bridge
59'-9 1/2" End Spans 68'-9" Interior Span
BTB Beam Details
STA. 1173+91.29, 42.00' Rt. (℄ I-80 Existing) Turn-in Date: October 2025
Polk County
IOWA DEPARTMENT OF TRANSPORTATION
Design No. 326 Design Sheet No. 24 of 47 FHWA No. 041970

Correction 12-13: Coil Tie Detail was Changed to Reflect the Distance Between Coil Tie Anchors Embedded ¼ inch.
Revised 10-2024: Revised "At Release" and "After Losses" Camber Values for BTB85 to BTB95. Revised "Reinforcing Bar List" and "Reinforcing Steel weight in the "BTB Beam Data" table for BTB55, BTB60, BTB65, BTB70, and BTB75 beams, due to changes of 6b3,6b4, 4c1, and 4e1 bars.
Issued 05-04.
Beams.dgn - 4750 - This Sheet Re-Issued 04-2024. Sheet Format Update.

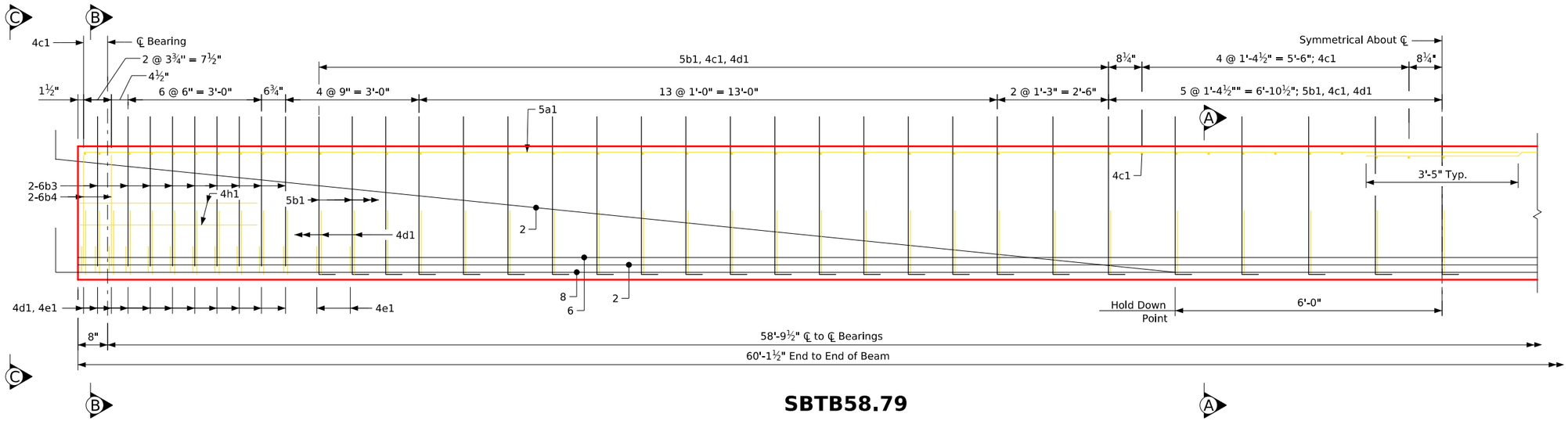

SBTB58.79

Note: Stirrup Extension.

∗ The standard 5" projection has been increased.

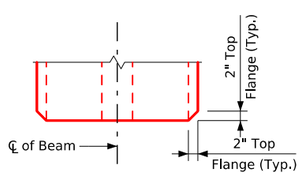

Top View

The top flange beam corners are to be chamfered 2" as shown at both ends of the beam.

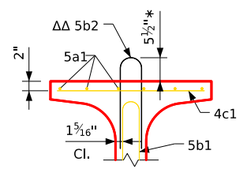

Section A-A
(Alternate)

See Alternate Bar Note on Design Sheet No. 24.

Area = 631.7 in.^{2}

$\bar{y}_b$ = 17.14 in.

I = 99,980 in.^{4}

Beam Section Properties

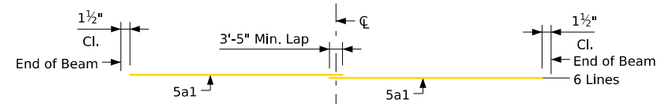

Top Flange Longitudinal Bar Layout

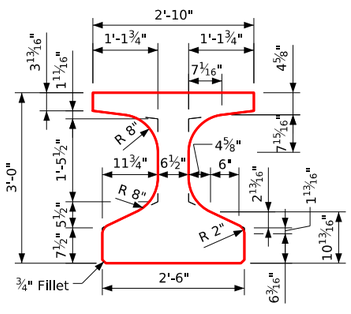

BTB Beam Cross Section

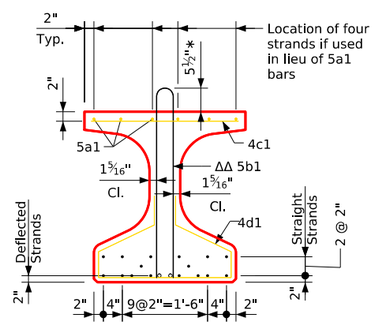

Section A-A

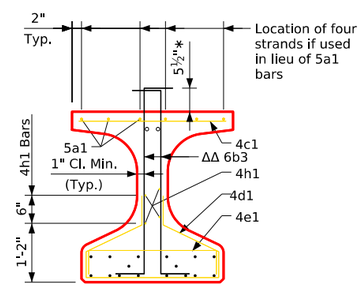

Section B-B

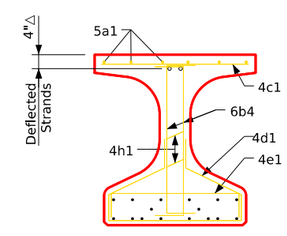

View C-C

∘ Deflected Strands
Δ Dimensions at End of Beam
ΔΔ Epoxy Coated Bars

Design For Widening & Redecking of 16°54'00" Skew (LA)

188'-4" x 70'-0" Pretensioned Prestressed Concrete Beam Bridge

59'-9 1/2" End Spans — 68'-9" Interior Span

SBTB58.79 Beam Details

STA. 1173+91.29, 42.00' Rt. (℄ I-80 Existing) — Turn-in Date: October 2025

Polk County

IOWA DEPARTMENT OF TRANSPORTATION

Design No. 326 — Design Sheet No. 25 of 47 — FHWA No. 041970

Revised 10-2024; Added one set of 6b4 to each beam end and revised rebar spacing.
Issued 02-08.
Beams.dgn - 4757 - This Sheet Re-Issued 04-2024. Sheet Format Update.

FILE NO. 32061	ENGLISH	DESIGN TEAM DS/KD/TMS	Bulb Tee "B" Beam - 60'-0" Span	Standard Sheet 4757 (Modified)	POLK COUNTY	PROJECT NUMBER IM-NHS-080-4(088)139--03-77	SHEET NUMBER V.25

4:42:14 PM 9/16/2025 ESORENS pw:\\pwhdruscen01:HDR_US_Central_01\Documents\IADOT\IDOT-NEMM_Stage_5B_FinalBrDes\6.0_CAD_BIM\6.2_WIP\Bridge\PPCB Design No. 326 - I-80EB over Four Mile Creek

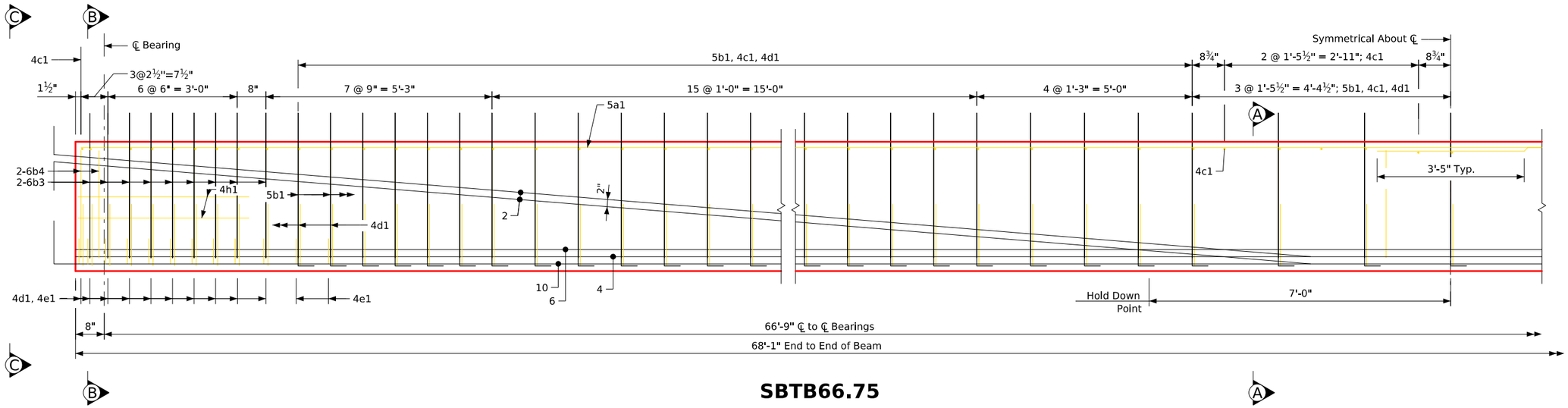

SBTB66.75

Note: Stirrup Extension.

∗ The standard 5" projection has been increased.

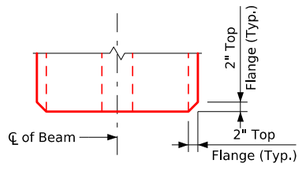

Top View

The top flange beam corners are to be chamfered 2" as shown at both ends of the beam.

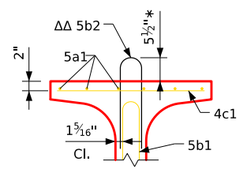

Section A-A
(Alternate)

See Alternate Bar Note on Design Sheet No. 24.

Area = 631.7 in.^{2}
$\bar{y}_b$ = 17.14 in.
I = 99,980 in.^{4}

Beam Section Properties

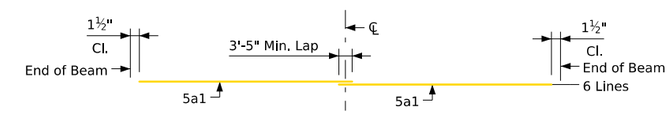

Top Flange Longitudinal Bar Layout

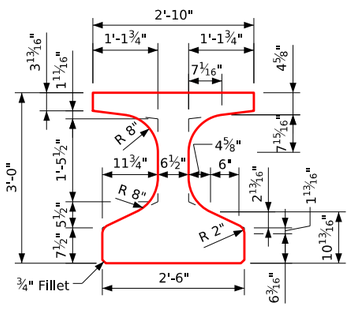

BTB Beam Cross Section

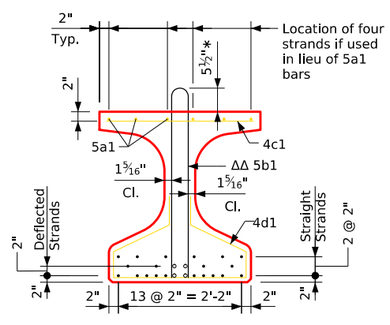

Section A-A

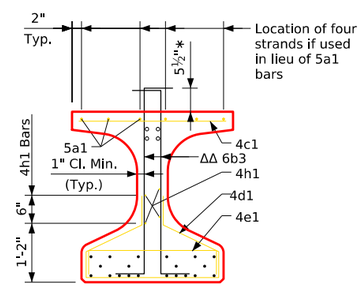

Section B-B

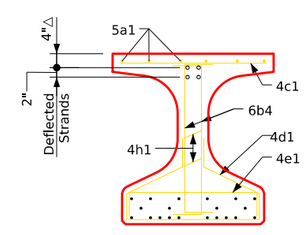

View C-C

∘ Deflected Strands
Δ Dimensions at End of Beam
ΔΔ Epoxy Coated Bars

Design For Widening & Redecking of 16°54'00" Skew (LA)

188'-4" x 70'-0" Pretensioned Prestressed Concrete Beam Bridge

59'-9 1/2" End Spans — 68'-9" Interior Span

SBTB66.75 Beam Details

STA. 1173+91.29, 42.00' Rt. (℄ I-80 Existing) — Turn-in Date: October 2025

Polk County

IOWA DEPARTMENT OF TRANSPORTATION

Design No. 326 — Design Sheet No. 26 of 47 — FHWA No. 041970

Revised 10-2024: Added one set of 6b3, 4d1, 4e1 to each beam end and revised rebar spacing.
Issued 02-08.
Beams.dgn - 4759 - This Sheet Re-Issued 04-2024. Sheet Format Update.

FILE NO. 32061	ENGLISH	DESIGN TEAM DS/KD/TMS	Bulb Tee "B" Beam - 70'-0" Span	Standard Sheet 4759 (Modified)	POLK COUNTY	PROJECT NUMBER IM-NHS-080-4(088)139--03-77	SHEET NUMBER V.26

Bulb Tee "B" Beam Intermediate Diaphragm Structural Steel

One Beam Connection (Detail "F")			Weight
		No. of Beam Connections	
Four - ⅞"Ø X 9¼" H.S. Bolts with Nuts & Washers = 9.6 Lbs.		6	58
One Detail "F"	One - Backing ℙ 5" x ⅜" x 1'-1⅜" = 7.1 Lbs.	6	43
	Two - Bent ℙ 9" x 6" x ½" x 0'-11" = 46.8 Lbs.	6	281
One Diaphragm			
		Number of Diaphragms	
Six - ⅞"Ø X 3" H.S. Bolts with Nuts & Washers = 7.8 Lbs.		3	23
	Length of Member		
One - C15 x 33.9 = 33.9 Lbs./Ft.	6'-9"	3	686
Intermediate Diaphragm Structural Steel - Total (Lbs.)			1,091

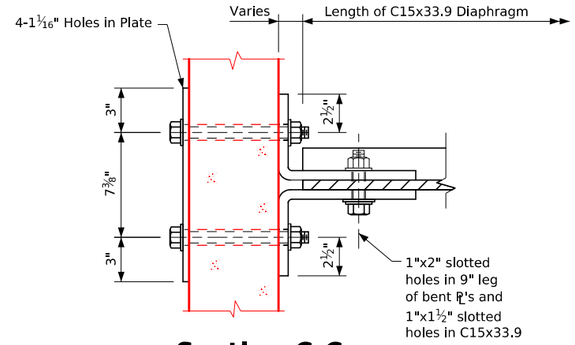

Section C-C

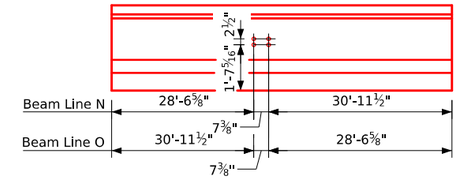

SBTB58.79

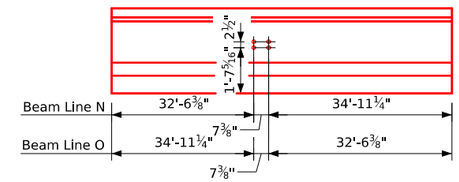

SBTB66.75

Intermediate Diaphragm Bolt Hole Locations

STRUCTURAL STEEL	
Weight	1,091 lbs.

NOTE: Structural Steel weight is included on the Summary Quantities Sheet.

Notes:

All diaphragm materials, including bolts, nuts and washers shall be galvanized.

Shop drawings of the steel diaphragms showing layout and details of the diaphragms shall be submitted for approval.

All costs for furnishing and installing steel intermediate diaphragms shall be included in the price bid for Structural Steel.

The 1½"Ø holes for the ⅞"Ø H.S. bolts shall be cast into the web. Drilling is not allowed.

The ⅞"Ø H.S. bolts through the web shall have a thread length of 3" min. and 4" max. and shall meet the requirements of ASTM A449.

All bolts are to be tightened prior to placing bridge deck concrete.

For location of Section C-C, see Design Sheet No. 28.

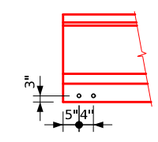

Fixed Pier

Beam Coil Tie Locations

Design For Widening & Redecking of 16°54'00" Skew (LA)

188'-4" x 70'-0" Pretensioned Prestressed Concrete Beam Bridge

59'-9 1/2" End Spans 68'-9" Interior Span

Steel Diaphragm Details

STA. 1173+91.29, 42.00' Rt. (℄ I-80 Existing) Turn-in Date: October 2025

Polk County

IOWA DEPARTMENT OF TRANSPORTATION

Design No. 326 Design Sheet No. 27 of 47 FHWA No. 041970

◐ Temporary bracing to be used between existing Beam Line M and Beam Line N during deck pour and shall not be removed until deck concrete has reached its design strength. See General Notes on Design Sheet No. 3. There are no permanent intermediate diaphragms between existing Beam Line M and Beam Line N.

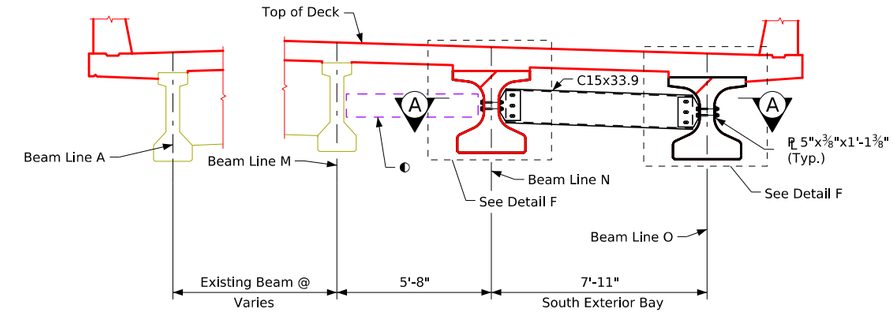

Section Showing Intermediate Diaphragms

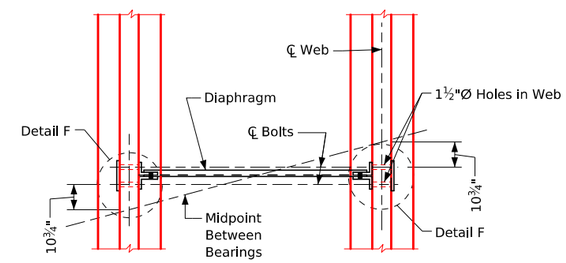

Part Section A-A

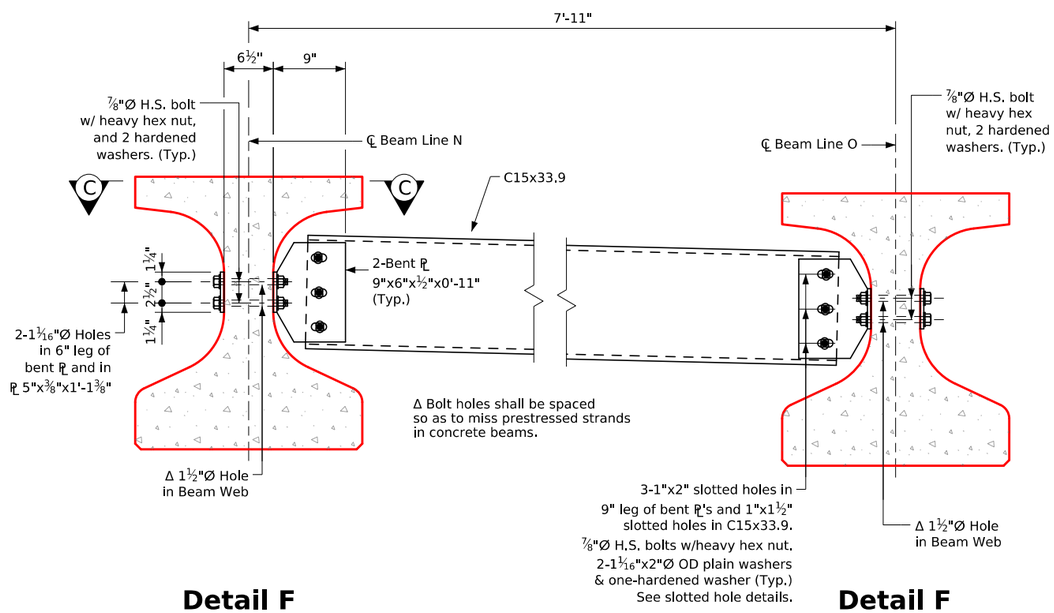

Detail F **Detail F**

Section Showing Intermediate Diaphragms

At South Exterior Bay

Notes:
For Section C-C, see Design Sheet No. 27.

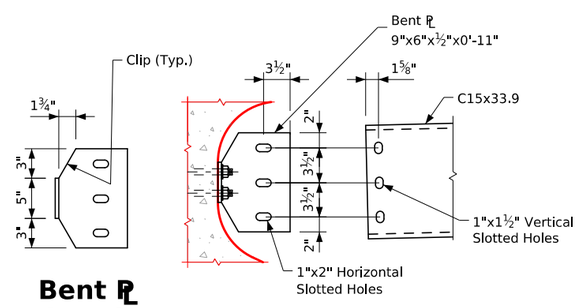

Bent ℄ Detail

Slotted Hole Details

Design For Widening & Redecking of 16°54'00" Skew (LA)

188'-4" x 70'-0" Pretensioned Prestressed Concrete Beam Bridge

59'-9 1/2" End Spans 68'-9" Interior Span

Steel Diaphragm Details

STA. 1173+91.29, 42.00' Rt. (℄ I-80 Existing) Turn-in Date: October 2025

Polk County

IOWA DEPARTMENT OF TRANSPORTATION

Design No. 326 Design Sheet No. 28 of 47 FHWA No. 041970

This Sheet Issued 06-14. Sheet 2 of 2.
Beams.dgn - 1036-2-BTB - This Sheet Re-Issued 04-2024. Sheet Format Update.

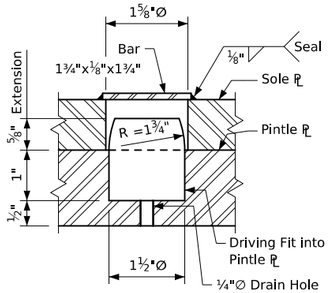

Pintle Detail

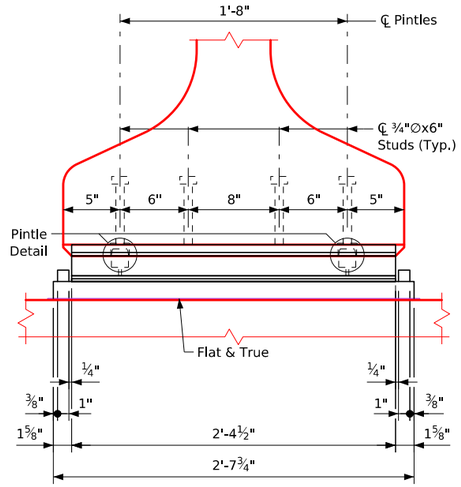

Section A-A

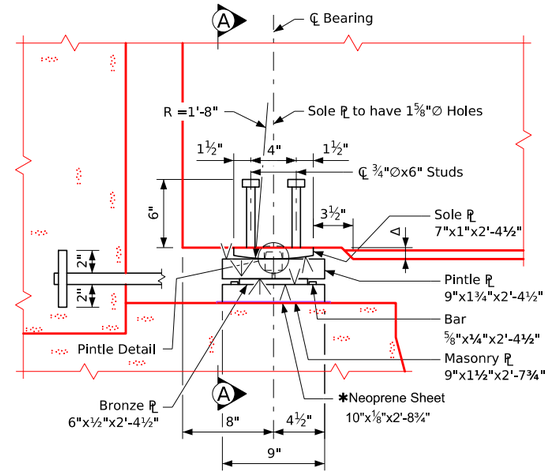

Part Elevation

△ Notch Beam End to Sole PL Thickness Maximum 1"

Abutment Bearing Notes:

The sliding surface of the bronze PL shall be lubricated in accordance with Article 4190.03, of the Standard Specifications, and the bronze metal shall be cast bronze in accordance with Article 4190.03, of the Standard Specifications. Top edges of bronze PL shall be beveled ⅛".

Surfaces marked "V" shall be finished ANSI 250 and surfaces marked "V" shall be finished ANSI 125.

Masonry plates are to be set on a ⅛" neoprene sheet.

Pintle plates, masonry plates, and lubricated bronze plates are a part of the superstructure Structural Steel quantity. Unit price bid for Structural Steel shall include allowance for cost of bronze plates. Cost of neoprene sheets shall be considered incidental to the Structural Steel bid item. Cost of the anchored curved sole plates is to be included in the price bid for Pretensioned Prestressed Concrete Beams.

The sole plate, pintle, pintle plate and the masonry plate shall be galvanized. The sole plate and masonry plate shall be fitted up and welded prior to galvanizing. The pintle and pintle plate shall be assembled prior to galvanizing. The surface of pintle plate in contact with bronze bearing plate shall be smooth and free of projections due to galvanizing.

Sole plates are to be set in forms when beams are cast and the bottom of beams formed out as shown to exclude concrete.

Sole plates shall comply with one of the following specifications:

ASTM A514 Grade B
ASTM A709 Grade HPS 70W

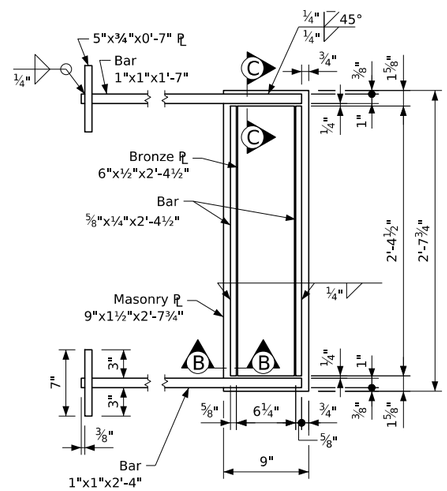

Plan of Masonry PL and Bronze PL

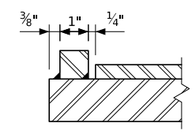

Section C-C

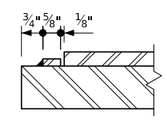

Section B-B

Pretensioned Prestressed Concrete Beam Abutment Bearing Details
(SBTB Beams)

* The ⅛ inch neoprene sheets are to be 50, 60, or 70 durometer hardness and shall be 1 inch greater in length and width than the bottom surface of the masonry plates or steel bearings.

Masonry PL / Bronze Bearing Assembly

Structural Steel for One Bearing	
Weight	308 lbs.

Does Not Include Curved Sole PL

Note: Structural Steel weight is included on the Summary Quantities Sheet.

Design For Widening & Redecking of 16°54'00" Skew (LA)

188'-4" x 70'-0" Pretensioned Prestressed Concrete Beam Bridge

59'-9 1/2" End Spans 68'-9" Interior Span

Abutment Bearing Details

STA. 1173+91.29, 42.00' Rt. (℄ I-80 Existing) Turn-in Date: October 2025

Polk County

IOWA DEPARTMENT OF TRANSPORTATION

Design No. 326 Design Sheet No. 29 of 47 FHWA No. 041970

Correction 05-14: Added Weight Table & Titles/Descriptions to Agree with Summary Quantities Sheet. Added Note Referring to Summary Quantities Sheet.
Issued 03-08.
Beams.dgn - 4541B - This Sheet Re-Issued 04-2024. Sheet Format Update.

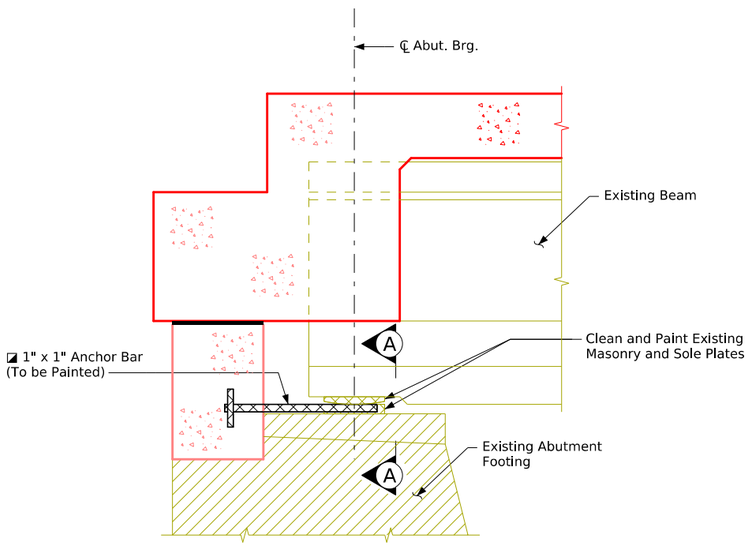

Painting Limits Detail

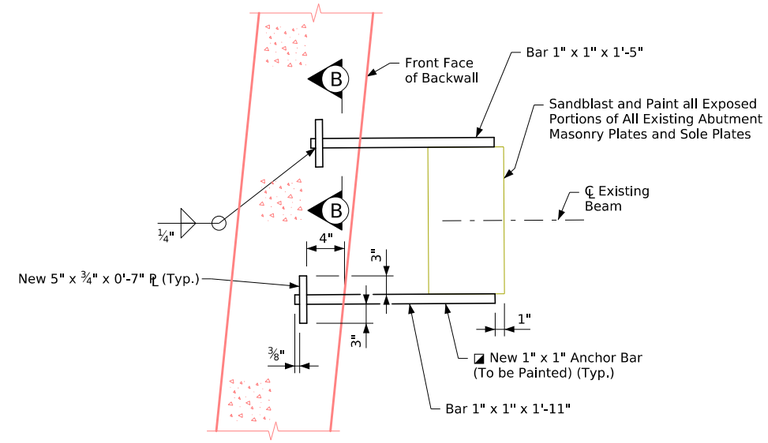

Plan View

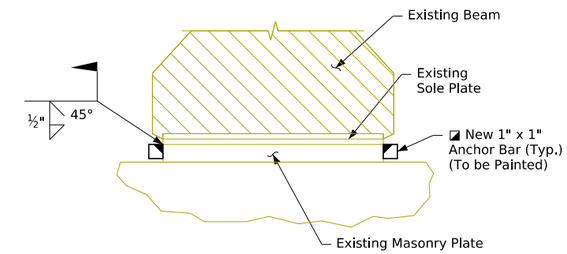

Section A-A

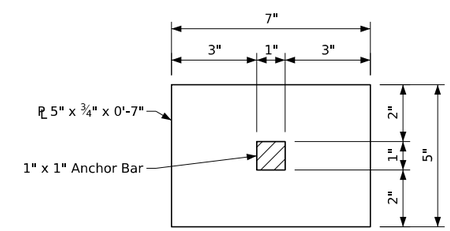

Section B-B

Notes:
For painting notes, see General Notes on Design Sheet No. 3.
◪ Remove and replace existing 1"x1" bent, severely corroded or fractured anchor rod as approved by the Engineer (36 assumed). Grind masonry plate surface smooth after removal. Cost of removing and replacing anchor rods and plates is to be included in the price bid for "Structural Concrete (Bridge)".
Welding of 1"x1" replacement anchor rods shall be completed prior to painting.

Design For Widening & Redecking of 16°54'00" Skew (LA)

188'-4" x 70'-0" Pretensioned
Prestressed Concrete Beam Bridge

59'-9 1/2" End Spans 68'-9" Interior Span

Bearing Repair Details

STA. 1173+91.29, 42.00' Rt. (℄ I-80 Existing) Turn-in Date: October 2025

Polk County

IOWA DEPARTMENT OF TRANSPORTATION

Design No. 326 Design Sheet No. 30 of 47 FHWA No. 041970

Beam End Repair Notes:

It is estimated that 2 beam end(s) will be repaired. The final quantity and limits of beam end areas shall be determined by the Engineer.

The Contractor shall notify the Engineer when concrete removals are complete by each location to allow inspection by the Engineer prior to placement of concrete or repair mortar.

The Contractor shall report tendon or reinforcing bar section loss, exposed during removal work, to the Engineer prior to performing any repair work. The Engineer shall be given adequate time (7 days max.) to determine whether beam reinforcing is required. The Contractor shall incorporate this time into the construction schedule with work in other areas of the project in order to not delay the project.

Removal tools shall be limited to 15 lb chipping hammers and to hand tools without power.

The Contractor shall perform the concrete repair work in accordance with the following procedures and/or as directed by the Engineer:

1. Initiate removal of unsound concrete with ½" saw cuts at perimeter. Do not cross cut at corners. Stop saw cuts short of corners and remove concrete by hand. Adjust depth of saw cut as required to prevent cutting of existing reinforcing steel or strands. Extreme care shall be exercised during concrete removal so that exposed strands and reinforcing bars are not damaged. Any damage done to the strands or bars by the Contractor shall be repaired by the Contractor at no additional cost to the State.
2. Remove deteriorated areas to sound concrete and chip square. Boundaries to be square with no feathered edges. Sandblast concrete surfaces in the repair area and the exposed steel to bare metal. Remove all dust and debris resulting from chipping and blasting by using clean compressed air.
3. If concrete removal results in more than half the diameter of any reinforcing bar or prestressing strand being exposed, then removal shall continue to a minimum of ¾" behind the first interior strand. If removals could exceed the 5" maximum horizontal depth, contact the Engineer prior to removal.
4. Report to the Engineer, prior to repair, section loss of tendons or reinforcing steel exposed during removals.
5. Apply two coats of protective coating/bonding agent (products are listed in the table on this sheet) to exposed prestressing strands and reinforcing bars according to manufacturer's recommendations.
6. Apply patching material. Type of material and application of material depends upon the extent of concrete removal and the two types of repair are to be as follows:
   A. Shallow repair: Shallow repair areas are those where concrete removal did not result in reinforcing bars or prestressing strands being exposed for more than half their diameters. Patching material shall be as listed in the table on this sheet. Patching materials contain corrosion inhibitors. Apply patching material to match original beam surface. Patch need not be formed. Follow manufacturer's instructions and recommendations for mixing, placing and curing.
   B. Regular repair: Regular repair areas are those where concrete removal extended behind the reinforcing bars and/or prestressing strands. These areas are to be placed using forms to match the original beam surface. Patching material shall be one of the grouts as listed in the table on this sheet. Patching materials contain corrosion inhibitors. Follow manufacturer's instructions and recommendations for mixing, placing and curing. Forms are to remain in place for seven days.
7. Sandblast 6' of the ends of the repaired beams as shown on this sheet. The sandblasting shall be a light blast just enough to expose the fine aggregates. Do not sandblast patching material. All costs associated with sandblasting are to be included in the price bid for "Repair Beam Ends".
8. Apply concrete sealer to sandblasted portions of beams ends. Do not seal patching material.

All costs include equipment and materials required to repair deteriorated beam ends and trim protruding prestressing strands as detailed in these plans. These details shall be included in the price bid for "Repair Beam Ends". The Engineer will count each end of each beam properly repaired, and the Contractor will be paid the contract unit price per each repair.

Beam Lines L and M at Abutments

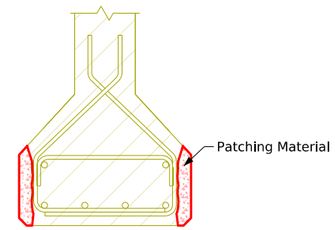

Shallow Repair Areas

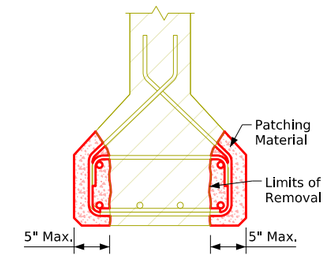

Regular Repair Areas

Note: The repair areas shown are schematic only. The actual area to be repaired will be determined by the Engineer. For location of beam ends to be repaired see beam layout below.

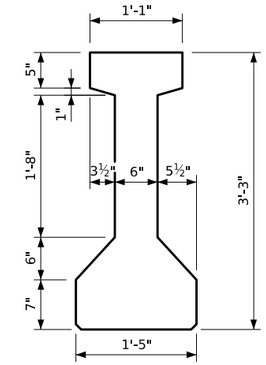

Beam Section

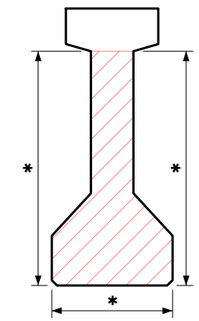

Limits of Sandblasting

* Sandblast the surfaces of the bottom flange and web within the limits shown to 6 feet of the beam ends.

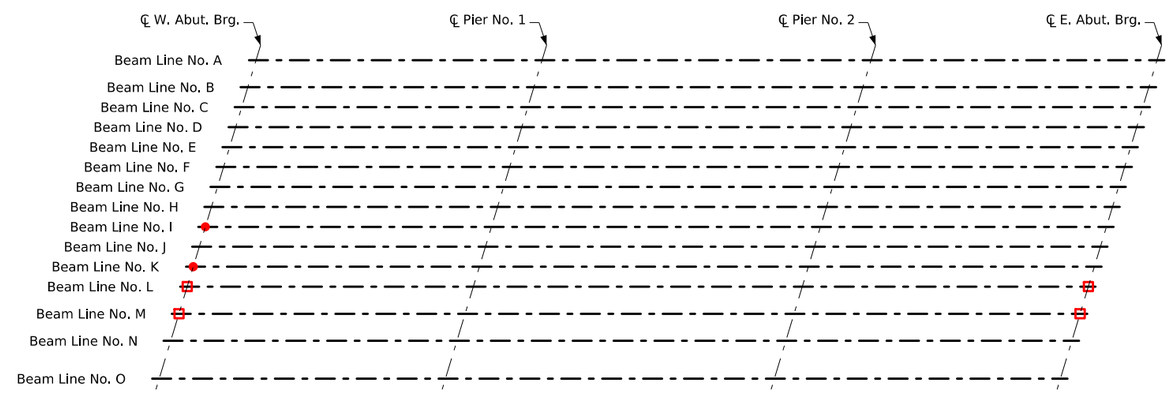

● - Regular Beam End Repair Locations

S - Shallow Beam End Repair Locations

□ - Trim protruding prestressing strands. See "Beam Lines L & M at Abutments" on this sheet.

Beam Layout

Table of Manufacturers

Manufacturer	Bonding Agent	Shallow Repair	Regular Repair
BASF	Mastermaco P 124	Masteremaco N 350 CI	Masteremaco S 477CI
Euclid	Duralprep A.C.	Verticoat Supreme	Eucorepair
Sika	Sika Armatec 110 Epocem	Sikatop 123 Plus	Sikatop 111 Plus

Design For Widening & Redecking of 16°54'00" Skew (LA)

188'-4" x 70'-0" Pretensioned Prestressed Concrete Beam Bridge

59'-9 1/2" End Spans 68'-9" Interior Span

Beam End Repair Details

STA. 1173+91.29, 42.00' Rt. (℄ I-80 Existing) Turn-in Date: October 2025

Polk County

IOWA DEPARTMENT OF TRANSPORTATION

Design No. 326 Design Sheet No. 31 of 47 FHWA No. 041970

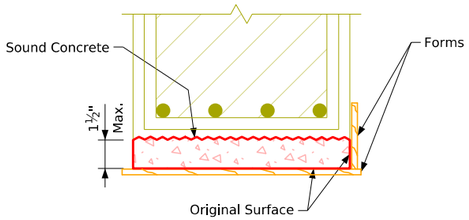

Shallow Repair Bottom Surface

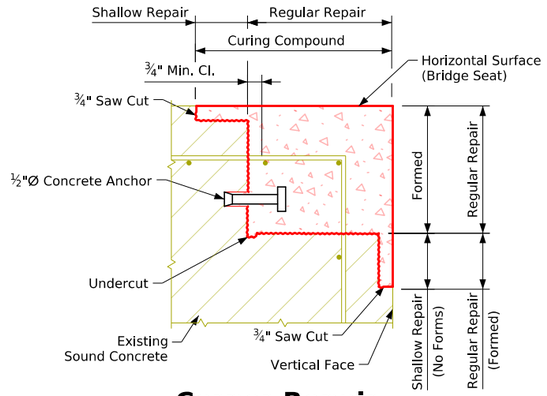

Corner Repair

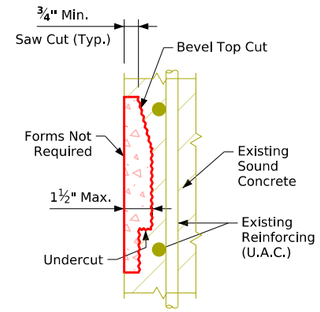

Shallow Repair Vertical Face

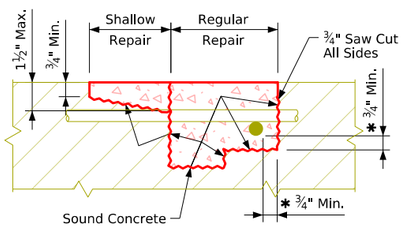

Repair Definition

✱ Indicates Clearance for an Un-Bonded Rebar.

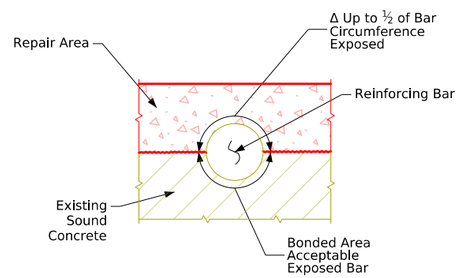

Δ If more than ½ of the rebar is exposed it shall be treated as an un-bonded rebar.

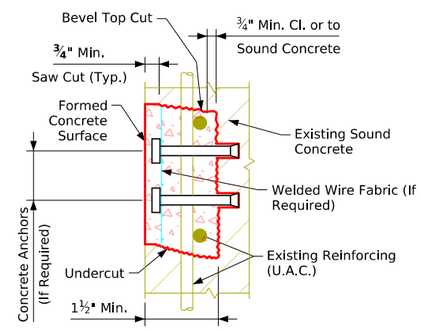

Regular Repair Vertical Face

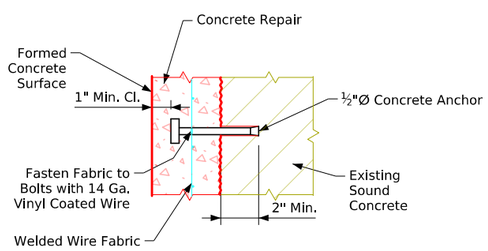

Anchor Detail

For Spacing and Use of Concrete Anchors and WWF See the Repair Notes.

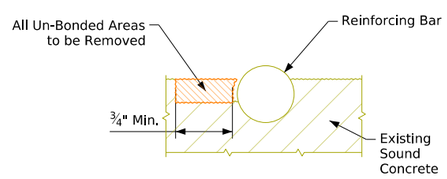

Concrete Removal Adjacent to Reinforcing

Repair Notes:

The spalled and hollow areas of this bridge as noted and shown in these plans shall be repaired as follows:

- All the costs of equipment and materials required to repair the spalled and hollow areas of this bridge shall be included in the price bid for "Concrete Repair".
- The price bid for "Concrete Repair" shall include the cost of all concrete anchors and welded wire fabric required by the plans.
- The Engineer shall determine and outline by visual and audible inspection the actual areas of the concrete repairs. The Contractor shall be paid for the actual amount of repairs made on a square foot basis based on the price bid per square foot.
- All existing reinforcing bars that are exposed by the concrete removal shall be cleaned and carefully incorporated into the new work, except badly deteriorated existing reinforcing which shall be replaced as directed by the Engineer.
- The concrete anchors required shall have a minimum pull out of 5,000 lbs based on 4,000 psi concrete. An anchor meeting the requirements of Iowa D.O.T. Materials I.M. 453.09 and the pull out load above is required. The anchors shall be galvanized and shall be installed according to recommendations of the Manufacturer. The cost of furnishing and installing the concrete anchors shall be included in the price bid for "Concrete Repair".
- The welded wire fabric shall be ASTM A185 and galvanized as per ASTM A-641. The WWF wires shall be spaced 3x3 or 4x4 and the wires shall have a nominal area of 0.014 to 0.029 sq in inclusive, example "WWF 3x3 - W1.4xW2.9".

Where reinforcement has been exposed and clearance around the periphery of the existing bar is provided, no supplemental reinforcing is required, except where existing reinforcement density and pattern are such that individual open spaces between bars are of 1.5 sq ft or larger. For this condition ½"∅ concrete anchors and welded wire fabric shall be installed at the rate of one concrete anchor with WWF per each 1.5 sq ft of area within each open space.

Repairing the structural concrete shall be in accordance with Section 2426, of the Standard Specifications.

Concrete Placement Quantities

Mark	Type	Units	Quantity
1	Shallow repair	Sq. Ft.	4
2	Regular repair	Sq. Ft.	-
		Total (Sq. Ft.)	4

Estimated Concrete Repair Quantities

Description	Units	Amount
Concrete Repair	Sq. Ft.	4

Note:
For estimated repair areas and locations, see Design Sheet No. 31.

Design For Widening & Redecking of 16°54'00" Skew (LA)

188'-4" x 70'-0" Pretensioned Prestressed Concrete Beam Bridge

59'-9 1/2" End Spans 68'-9" Interior Span

Concrete Repair Details

STA. 1173+91.29, 42.00' Rt. (℄ I-80 Existing) Turn-in Date: October 2025

Polk County

IOWA DEPARTMENT OF TRANSPORTATION

Design No. 326 Design Sheet No. 32 of 47 FHWA No. 041970

Revised 10-2014 - Deleted All References to Grout. Section 2426 Covers this Requirement and Doesn't Need to be Stated on the Plans.
RepairRetrofitBridges.dgn - D_Concrete Repair Details - This Sheet Redrawn 09-27-1990.
RepairRetrofitBridges.dgn - D_Concrete Repair Details - This Sheet Re-Issued 07-23.

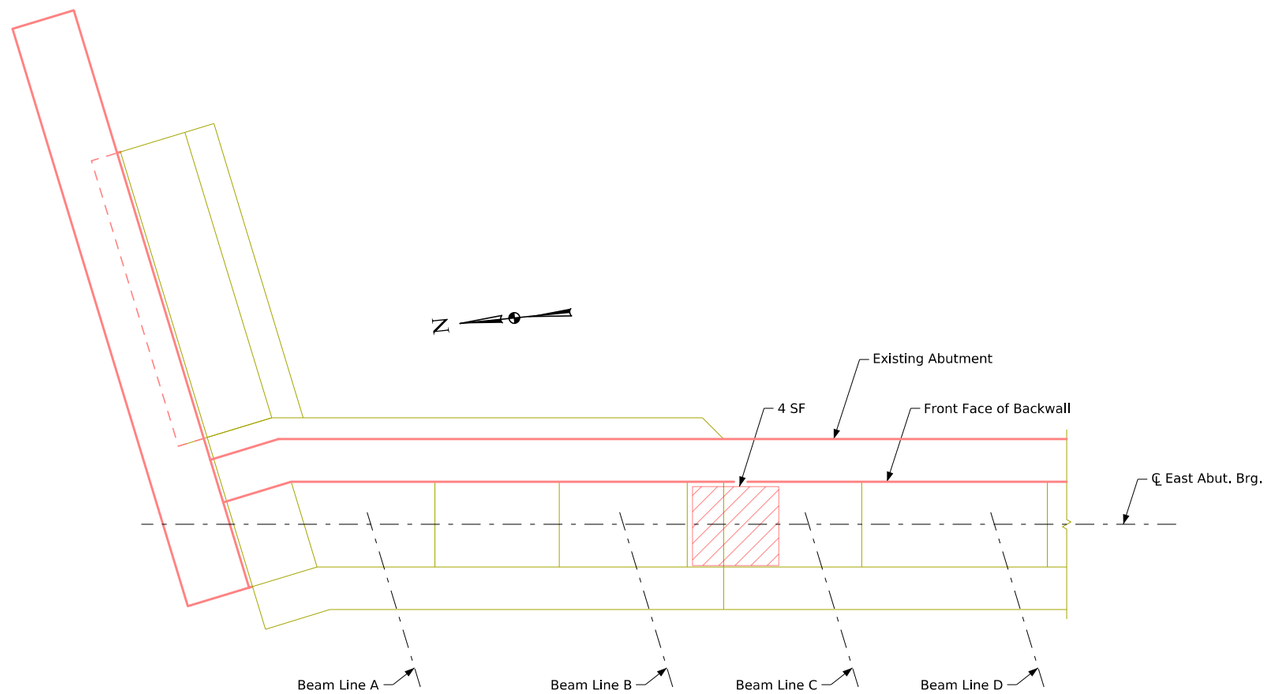

Part Plan at East Abutment

Legend

Indicates Shallow Repair

Indicates Regular Repair

Notes:
See Design Sheet No. 32 for notes and details for concrete repairs.
Areas shown are approximate. Engineer shall determine actual areas of repair at the time of construction.

Design For Widening & Redecking of 16°54'00" Skew (LA)

188'-4" x 70'-0" Pretensioned
Prestressed Concrete Beam Bridge

59'-9 1/2" End Spans 68'-9" Interior Span

Concrete Repair Details

STA. 1173+91.29, 42.00' Rt. (℄ I-80 Existing) Turn-in Date: October 2025

Polk County

IOWA DEPARTMENT OF TRANSPORTATION

Design No. 326 Design Sheet No. 33 of 47 FHWA No. 041970

Bench Mark No. Feno200, 1-Meter Rod Monument, Sta. 1183+18.58, 845.82' Rt., Elev. 851.56

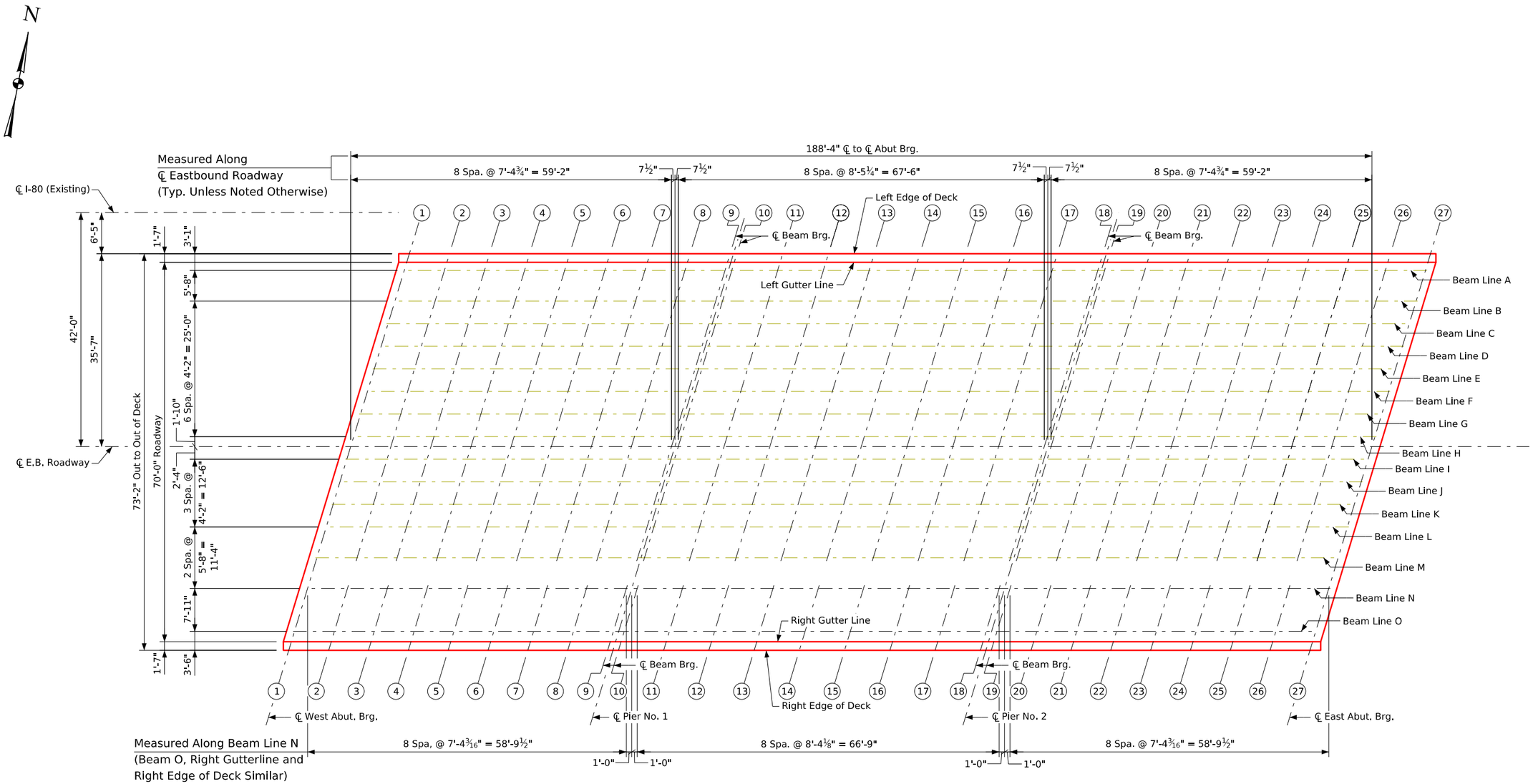

Top of Deck Elevations & Haunch Locations

Note:
For Table of Top of Deck Elevations see Design Sheet 35.

Design For Widening & Redecking of 16°54'00" Skew (LA)

188'-4" x 70'-0" Pretensioned Prestressed Concrete Beam Bridge

59'-9 1/2" End Spans — 68'-9" Interior Span

Top of Deck Elevations (1 of 2)

STA. 1173+91.29, 42.00' Rt. (℄ I-80 Existing) — Turn-in Date: October 2025

Polk County

IOWA DEPARTMENT OF TRANSPORTATION

Design No. 326 — Design Sheet No. 34 of 47 — FHWA No. 041970

Table of Top of Deck Elevations

Line \ Point	℄ West Abut. Brg.								℄ Pier No. 1 Bearings									℄ Pier No. 2 Bearings									℄ East Abut. Brg.
	1	2	3	4	5	6	7	8	9	10	11	12	13	14	15	16	17	18	19	20	21	22	23	24	25	26	27
Left Edge of Deck	840.32	840.35	840.38	840.42	840.45	840.48	840.51	840.55	840.58	840.59	840.63	840.66	840.70	840.74	840.78	840.81	840.85	840.89	840.90	840.93	840.96	841.00	841.03	841.06	841.10	841.13	841.16
Left Gutter Line	840.31	840.35	840.38	840.41	840.45	840.48	840.51	840.55	840.58	840.58	840.62	840.66	840.70	840.74	840.77	840.81	840.85	840.89	840.89	840.93	840.96	840.99	841.03	841.06	841.09	841.13	841.16
Beam Line A	840.36	840.39	840.42	840.46	840.49	840.52	840.56	840.59	840.62	840.63	840.67	840.70	840.74	840.78	840.82	840.86	840.89	840.93	840.94	840.97	841.00	841.04	841.07	841.10	841.14	841.17	841.20
Beam Line B	840.52	840.55	840.58	840.62	840.65	840.68	840.72	840.75	840.78	840.79	840.83	840.87	840.90	840.94	840.98	841.02	841.06	841.09	841.10	841.13	841.17	841.20	841.23	841.27	841.30	841.33	841.37
Beam Line C	840.64	840.67	840.70	840.74	840.77	840.80	840.84	840.87	840.90	840.91	840.95	840.99	841.02	841.06	841.10	841.14	841.18	841.21	841.22	841.25	841.29	841.32	841.35	841.39	841.42	841.45	841.48
Beam Line D	840.76	840.79	840.82	840.86	840.89	840.92	840.96	840.99	841.02	841.03	841.07	841.10	841.14	841.18	841.22	841.26	841.29	841.33	841.34	841.37	841.40	841.44	841.47	841.50	841.54	841.57	841.60
Beam Line E	840.88	840.91	840.94	840.98	841.01	841.04	841.08	841.11	841.14	841.15	841.19	841.22	841.26	841.30	841.34	841.38	841.41	841.45	841.46	841.49	841.52	841.56	841.59	841.62	841.66	841.69	841.72
Beam Line F	840.98	841.01	841.04	841.08	841.11	841.14	841.18	841.21	841.24	841.25	841.29	841.32	841.36	841.40	841.44	841.48	841.51	841.55	841.56	841.59	841.62	841.66	841.69	841.72	841.76	841.79	841.82
Beam Line G	841.05	841.09	841.12	841.15	841.19	841.22	841.25	841.29	841.32	841.33	841.36	841.40	841.44	841.48	841.52	841.55	841.59	841.63	841.64	841.67	841.70	841.74	841.77	841.80	841.84	841.87	841.90
Beam Line H	841.13	841.16	841.19	841.23	841.26	841.29	841.33	841.36	841.39	841.40	841.44	841.47	841.51	841.55	841.59	841.63	841.66	841.70	841.71	841.74	841.77	841.81	841.84	841.87	841.91	841.94	841.97
℄ E.B. Roadway	841.13	841.17	841.20	841.24	841.27	841.30	841.34	841.37	841.40	841.41	841.45	841.48	841.52	841.56	841.60	841.63	841.67	841.71	841.72	841.75	841.78	841.82	841.85	841.88	841.92	841.95	841.98
Beam Line I	841.11	841.15	841.18	841.21	841.25	841.28	841.31	841.35	841.38	841.39	841.42	841.46	841.50	841.54	841.57	841.61	841.65	841.69	841.69	841.73	841.76	841.79	841.83	841.86	841.89	841.93	841.96
Beam Line J	841.03	841.06	841.09	841.13	841.16	841.19	841.23	841.26	841.29	841.30	841.34	841.38	841.41	841.45	841.49	841.53	841.57	841.60	841.61	841.64	841.68	841.71	841.74	841.78	841.81	841.84	841.87
Beam Line K	840.94	840.97	841.01	841.04	841.07	841.11	841.14	841.17	841.20	841.21	841.25	841.29	841.32	841.36	841.40	841.44	841.48	841.51	841.52	841.55	841.59	841.62	841.65	841.69	841.72	841.75	841.79
Beam Line L	840.82	840.85	840.89	840.92	840.95	840.99	841.02	841.05	841.09	841.09	841.13	841.17	841.21	841.25	841.28	841.32	841.36	841.40	841.40	841.44	841.47	841.50	841.54	841.57	841.60	841.64	841.67
Beam Line M	840.64	840.68	840.71	840.74	840.78	840.81	840.84	840.88	840.91	840.92	840.95	840.99	841.03	841.07	841.11	841.14	841.18	841.22	841.22	841.26	841.29	841.32	841.36	841.39	841.42	841.46	841.49
Beam Line N	840.47	840.50	840.53	840.57	840.60	840.63	840.66	840.70	840.73	840.74	840.78	840.81	840.85	840.89	840.93	840.97	841.00	841.04	841.05	841.08	841.12	841.15	841.18	841.22	841.25	841.28	841.32
Beam Line O	840.22	840.25	840.28	840.32	840.35	840.38	840.42	840.45	840.48	840.49	840.53	840.57	840.60	840.64	840.68	840.72	840.76	840.79	840.80	840.84	840.87	840.90	840.94	840.97	841.00	841.03	841.07
Right Gutter Line	840.16	840.19	840.22	840.26	840.29	840.32	840.36	840.39	840.42	840.43	840.47	840.51	840.55	840.58	840.62	840.66	840.70	840.73	840.74	840.78	840.81	840.84	840.88	840.91	840.94	840.98	841.01
Right Edge of Deck	840.16	840.19	840.22	840.25	840.29	840.32	840.35	840.39	840.42	840.43	840.47	840.50	840.54	840.58	840.62	840.66	840.69	840.73	840.74	840.77	840.81	840.84	840.87	840.91	840.94	840.97	841.01

Note:
For Top of Deck Elevations and Haunch Locations, see Design Sheet 34.

Design For Widening & Redecking of 16°54'00" Skew (LA)

188'-4" x 70'-0" Pretensioned Prestressed Concrete Beam Bridge

59'-9 1/2" End Spans 68'-9" Interior Span

Top of Deck Elevations (2 of 2)

STA. 1173+91.29, 42.00' Rt. (℄ I-80 Existing) Turn-in Date: October 2025

Polk County

IOWA DEPARTMENT OF TRANSPORTATION

Design No. 326 Design Sheet No. 35 of 47 FHWA No. 041970

Bench Mark No. Feno0200, 1-Meter Rod Monument, Sta. 1183+18.58, 845.82' Rt., Elev. 851.56

Beam Line Haunch Elevations

Beam Line	℄ West Abut. Brg.								℄ Pier No. 1 Bearings									℄ Pier No. 2 Bearings									℄ East Abut. Brg.
	1	2	3	4	5	6	7	8	9	10	11	12	13	14	15	16	17	18	19	20	21	22	23	24	25	26	27
A	839.65	839.71	839.76	839.81	839.85	839.87	839.89	839.91	839.91	839.92	839.99	840.05	840.11	840.15	840.18	840.21	840.22	840.22	840.23	840.29	840.34	840.39	840.43	840.46	840.47	840.49	840.49
B	839.81	839.87	839.92	839.97	840.01	840.04	840.06	840.07	840.08	840.08	840.15	840.22	840.27	840.32	840.35	840.37	840.38	840.39	840.39	840.45	840.51	840.55	840.59	840.62	840.64	840.65	840.66
C	839.93	839.97	840.02	840.06	840.09	840.12	840.15	840.17	840.20	840.20	840.26	840.32	840.37	840.41	840.45	840.47	840.49	840.51	840.51	840.56	840.60	840.64	840.67	840.70	840.73	840.76	840.78
D	840.05	840.09	840.14	840.18	840.21	840.24	840.27	840.29	840.32	840.32	840.38	840.44	840.49	840.53	840.57	840.59	840.61	840.62	840.63	840.68	840.72	840.76	840.79	840.82	840.85	840.87	840.90
E	840.17	840.21	840.26	840.30	840.33	840.36	840.39	840.41	840.43	840.44	840.50	840.56	840.61	840.65	840.68	840.71	840.73	840.74	840.75	840.79	840.84	840.88	840.91	840.94	840.97	840.99	841.02
F	840.27	840.31	840.35	840.39	840.43	840.46	840.49	840.51	840.53	840.54	840.60	840.66	840.71	840.75	840.78	840.81	840.83	840.84	840.85	840.89	840.94	840.98	841.01	841.04	841.07	841.09	841.11
G	840.34	840.39	840.43	840.47	840.51	840.54	840.57	840.59	840.61	840.62	840.68	840.73	840.79	840.83	840.86	840.89	840.91	840.92	840.93	840.97	841.01	841.05	841.09	841.12	841.15	841.17	841.19
H	840.42	840.46	840.50	840.54	840.58	840.61	840.64	840.66	840.68	840.69	840.75	840.81	840.86	840.90	840.93	840.96	840.98	840.99	841.00	841.04	841.09	841.13	841.16	841.19	841.22	841.24	841.26
I	840.41	840.45	840.49	840.53	840.57	840.60	840.63	840.65	840.67	840.68	840.74	840.80	840.85	840.89	840.92	840.95	840.97	840.98	840.99	841.03	841.07	841.11	841.15	841.18	841.21	841.23	841.25
J	840.32	840.36	840.40	840.44	840.48	840.51	840.54	840.56	840.58	840.59	840.65	840.71	840.76	840.80	840.83	840.86	840.88	840.89	840.90	840.94	840.99	841.03	841.06	841.09	841.12	841.14	841.16
K	840.23	840.27	840.32	840.36	840.39	840.42	840.45	840.47	840.49	840.50	840.56	840.62	840.67	840.71	840.74	840.77	840.79	840.80	840.81	840.85	840.90	840.94	840.97	841.00	841.03	841.05	841.08
L	840.11	840.17	840.23	840.27	840.31	840.34	840.36	840.37	840.38	840.38	840.46	840.52	840.58	840.62	840.65	840.67	840.68	840.69	840.69	840.75	840.81	840.86	840.89	840.92	840.94	840.95	840.96
M	839.93	839.99	840.05	840.09	840.13	840.16	840.18	840.19	840.20	840.21	840.28	840.34	840.40	840.44	840.47	840.49	840.50	840.51	840.51	840.57	840.63	840.68	840.71	840.74	840.76	840.77	840.78
N	839.76	839.81	839.86	839.91	839.95	839.97	840.00	840.01	840.02	840.03	840.10	840.17	840.22	840.27	840.30	840.32	840.33	840.34	840.34	840.40	840.45	840.49	840.53	840.56	840.58	840.60	840.61
O	839.51	839.56	839.61	839.66	839.69	839.72	839.75	839.76	839.77	839.78	839.85	839.92	839.97	840.02	840.05	840.07	840.08	840.09	840.09	840.15	840.20	840.24	840.28	840.31	840.33	840.35	840.36

Miscellaneous Data Table

	Beam Line		℄ West Abut. Brg.								℄ Pier No. 1 Bearings									℄ Pier No. 2 Bearings									℄ East Abut. Brg.
			1	2	3	4	5	6	7	8	9	10	11	12	13	14	15	16	17	18	19	20	21	22	23	24	25	26	27
Anticipated Deflection Due to Deck (in.)	A,B, L & M		0	5/16	9/16	3/4	13/16	3/4	9/16	5/16	0	0	3/8	11/16	15/16	1	15/16	11/16	3/8	0	0	5/16	9/16	3/4	13/16	3/4	9/16	5/16	0
	C-K		0	1/8	1/4	5/16	3/8	5/16	1/4	1/8	0	0	1/4	1/2	5/8	11/16	5/8	1/2	1/4	0	0	1/8	1/4	5/16	3/8	5/16	1/4	1/8	0
	N-O		0	1/4	7/16	5/8	5/8	5/8	7/16	1/4	0	0	3/8	3/4	15/16	1	15/16	3/4	3/8	0	0	1/4	7/16	5/8	5/8	5/8	7/16	1/4	0
Cross Slope Adjustments (in.)	A-B		3/16	3/16	3/16	3/16	3/16	3/16	3/16	3/16	3/16	1/4	1/4	1/4	1/4	1/4	1/4	1/4	1/4	1/4	3/16	3/16	3/16	3/16	3/16	3/16	3/16	3/16	3/16
	C-D		3/16	3/16	3/16	3/16	3/16	3/16	3/16	3/16	3/16	3/16	3/16	3/16	3/16	3/16	3/16	3/16	3/16	3/16	3/16	3/16	3/16	3/16	3/16	3/16	3/16	3/16	3/16
	E-K		1/8	1/8	1/8	1/8	1/8	1/8	1/8	1/8	1/8	1/8	1/8	1/8	1/8	1/8	1/8	1/8	1/8	1/8	1/8	1/8	1/8	1/8	1/8	1/8	1/8	1/8	1/8
	L-M		3/16	3/16	3/16	3/16	3/16	3/16	3/16	3/16	3/16	1/4	1/4	1/4	1/4	1/4	1/4	1/4	1/4	1/4	3/16	3/16	3/16	3/16	3/16	3/16	3/16	3/16	3/16
	N-O		1/2	1/2	1/2	1/2	1/2	1/2	1/2	1/2	1/2	1/2	1/2	1/2	1/2	1/2	1/2	1/2	1/2	1/2	1/2	1/2	1/2	1/2	1/2	1/2	1/2	1/2	1/2
Allowable Field Haunch (in. & ft.)	Max.	A,B, L & M	2 (0.167)	2 (0.167)	2 (0.167)	2 (0.167)	2 (0.167)	2 (0.167)	2 (0.167)	2 (0.167)	2 (0.167)	2 (0.167)	2 (0.167)	2 (0.167)	2 (0.167)	2 (0.167)	2 (0.167)	2 (0.167)	2 (0.167)	2 (0.167)	2 (0.167)	2 (0.167)	2 (0.167)	2 (0.167)	2 (0.167)	2 (0.167)	2 (0.167)	2 (0.167)	2 (0.167)
		C-K	1 3/4 (0.146)	1 3/4 (0.146)	1 3/4 (0.146)	1 3/4 (0.146)	1 3/4 (0.146)	1 3/4 (0.146)	1 3/4 (0.146)	1 3/4 (0.146)	1 3/4 (0.146)	1 3/4 (0.146)	1 3/4 (0.146)	1 3/4 (0.146)	1 3/4 (0.146)	1 3/4 (0.146)	1 3/4 (0.146)	1 3/4 (0.146)	1 3/4 (0.146)	1 3/4 (0.146)	1 3/4 (0.146)	1 3/4 (0.146)	1 3/4 (0.146)	1 3/4 (0.146)	1 3/4 (0.146)	1 3/4 (0.146)	1 3/4 (0.146)	1 3/4 (0.146)	1 3/4 (0.146)	1 3/4 (0.146)
		N-O	3 (0.25)	3 (0.25)	3 (0.25)	3 (0.25)	3 (0.25)	3 (0.25)	3 (0.25)	3 (0.25)	3 (0.25)	3 (0.25)	3 (0.25)	3 (0.25)	3 (0.25)	3 (0.25)	3 (0.25)	3 (0.25)	3 (0.25)	3 (0.25)	3 (0.25)	3 (0.25)	3 (0.25)	3 (0.25)	3 (0.25)	3 (0.25)	3 (0.25)	3 (0.25)	3 (0.25)
	Min.	A, B, L & M	- 5/16 (-0.025)	- 5/16 (-0.025)	- 5/16 (-0.025)	- 5/16 (-0.025)	- 5/16 (-0.025)	- 5/16 (-0.025)	- 5/16 (-0.025)	- 5/16 (-0.025)	- 5/16 (-0.025)	- 1/4 (-0.022)	- 1/4 (-0.022)	- 1/4 (-0.022)	- 1/4 (-0.022)	- 1/4 (-0.022)	- 1/4 (-0.022)	- 1/4 (-0.022)	- 1/4 (-0.022)	- 1/4 (-0.022)	- 5/16 (-0.025)	- 5/16 (-0.025)	- 5/16 (-0.025)	- 5/16 (-0.025)	- 5/16 (-0.025)	- 5/16 (-0.025)	- 5/16 (-0.025)	- 5/16 (-0.025)	- 5/16 (-0.025)
		C-E	- 5/16 (-0.025)	- 5/16 (-0.025)	- 5/16 (-0.025)	- 5/16 (-0.025)	- 5/16 (-0.025)	- 5/16 (-0.025)	- 5/16 (-0.025)	- 5/16 (-0.025)	- 5/16 (-0.025)	- 5/16 (-0.025)	- 5/16 (-0.025)	- 5/16 (-0.025)	- 5/16 (-0.025)	- 5/16 (-0.025)	- 5/16 (-0.025)	- 5/16 (-0.025)	- 5/16 (-0.025)	- 5/16 (-0.025)	- 5/16 (-0.025)	- 5/16 (-0.025)	- 5/16 (-0.025)	- 5/16 (-0.025)	- 5/16 (-0.025)	- 5/16 (-0.025)	- 5/16 (-0.025)	- 5/16 (-0.025)	- 5/16 (-0.025)
		F-K	- 3/8 (-0.031)	- 3/8 (-0.031)	- 3/8 (-0.031)	- 3/8 (-0.031)	- 3/8 (-0.031)	- 3/8 (-0.031)	- 3/8 (-0.031)	- 3/8 (-0.031)	- 3/8 (-0.031)	- 3/8 (-0.031)	- 3/8 (-0.031)	- 3/8 (-0.031)	- 3/8 (-0.031)	- 3/8 (-0.031)	- 3/8 (-0.031)	- 3/8 (-0.031)	- 3/8 (-0.031)	- 3/8 (-0.031)	- 3/8 (-0.031)	- 3/8 (-0.031)	- 3/8 (-0.031)	- 3/8 (-0.031)	- 3/8 (-0.031)	- 3/8 (-0.031)	- 3/8 (-0.031)	- 3/8 (-0.031)	- 3/8 (-0.031)
		N-O	0 (0.000)	0 (0.000)	0 (0.000)	0 (0.000)	0 (0.000)	0 (0.000)	0 (0.000)	0 (0.000)	0 (0.000)	0 (0.000)	0 (0.000)	0 (0.000)	0 (0.000)	0 (0.000)	0 (0.000)	0 (0.000)	0 (0.000)	0 (0.000)	0 (0.000)	0 (0.000)	0 (0.000)	0 (0.000)	0 (0.000)	0 (0.000)	0 (0.000)	0 (0.000)	0 (0.000)

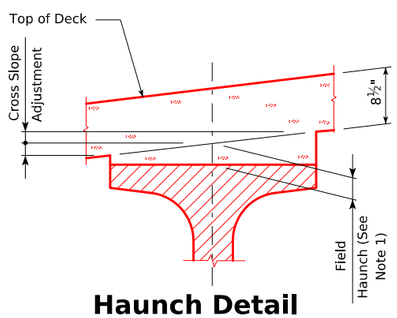

Haunch Detail

Note:
Haunch locations are at the same location as the encircled numbers shown on the Top of Deck Elevations Sheet.

Notes:

1. To calculate field haunch needed at each location, survey the top of beam top flanges at the points as indicated in the table of beam line haunch elevations. Subtract the surveyed beam shot from the "Beam Line Haunch Elevation". This value will be the field haunch needed (see "Field Haunch" in Haunch Detail). The "Beam Line Haunch Elevation" includes adjustments for deck thicknesses and anticipated deflections. No additional calculations are required. If the field haunch exceeds the maximums and minimums indicated in the Misc. Data Table, adjustments to the grade or additional haunch reinforcement will be required.
2. Bridge seat elevations for new beams are set based on theoretical camber and beam deflections. These bridge seats will provide a theoretical beam haunch with design parameters.
3. Field haunches are determined using surveyed top of beam top flange elevations and "Beam Line Haunch Elevation" data. Allowable maximum and minimum "Field Haunch" values are given in the "Miscellaneous Data" table. "Cross Slope Adjustment" values will aid the contractor in determining actual formed haunch dimensions at the edges of the top flange.
4. Downward deflections are positive.

Design For Widening & Redecking of 16°54'00" Skew (LA)

188'-4" x 70'-0" Pretensioned Prestressed Concrete Beam Bridge

59'-9 1/2" End Spans 68'-9" Interior Span

Deck Haunch Data Details

STA. 1173+91.29, 42.00' Rt. (℄ I-80 Existing) Turn-in Date: October 2025

Polk County

IOWA DEPARTMENT OF TRANSPORTATION

Design No. 326 Design Sheet No. 36 of 47 FHWA No. 041970

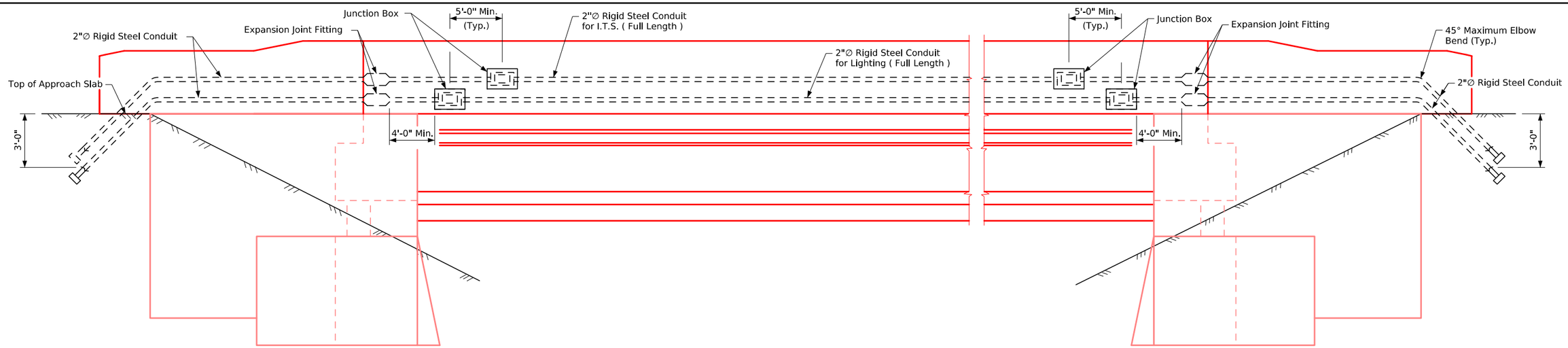

West Abutment

East Abutment

Exterior Elevation - South Barrier Rail - Looking North

Conduit Notes:

See LI-104 standard road plan for additional information on junction boxes.

Construction shall conform to the current Iowa D.O.T. Standard and Supplemental Specifications and Special Provisions.

Conduit installation shall be in accordance with Article 2523.03, N, of the Standard Specifications.

All "C" entrance holes in junction boxes shall be drilled and tapped for the specified conduit size. All other holes shall have a concrete - tight slip fit.

Conduit ends shall not protrude into junction box more than ¼". Drain pipe end shall be flush with inside surface of box. Grounding buttons shall be located approximately 3" from the inside surface of the box wall, and not closer than 3" to the edge of any hole in the box floor. Holes for drain pipe shall be placed in the low corner of the box, with a minimum clearance of 1" between the edge of the hole and the inside surface of the box wall. Typical details are shown on this sheet.

The rigid steel conduit, junction boxes and fittings including labor and any additional work to do the installation is considered incidental to the cost of the railing.

Stainless-steel reinforcement shall not be allowed to be in contact with the uncoated reinforcement, bare metal forming hardware, or to galvanized attachments or galvanized conduit.

Expansion fitting shall be as specified or as approved by the Engineer. Typical details are shown on this sheet.

I.T.S. Conduit Notes:

See LI-104 standard road plan for additional informational information on junction boxes.

I.T.S. conduit shall be limited to six 45° elbow bends for a cable pull from handhole to handhole.

Rigid steel conduit for I.T.S. applications shall be installed and prepared to facilitate installation of fiber optic cable.

The minimum inside bend radius for rigid steel conduit used for I.T.S. applications shall be 18".

Rigid steel conduit for I.T.S. applications shall be cut and threaded to eliminate exposed threads after completing the connections; all couplings shall be tightened until the conduit ends meet to allow a continuous inner surface throughout the entire length of the conduit run. Nipples should be used to eliminate cutting and threading short lengths of conduit.

All burrs and roughened surfaces shall be removed from conduits and fittings. All conduit runs shall be reamed, cleaned and swabbed for installation of fiber optic cable.

Only galvanized fittings shall be used with rigid steel conduit. Damaged galvanized surfaces of rigid steel conduit or fittings shall be painted with an acceptable zinc-rich paint.

I.T.S. conduit shall include a polypropylene pull rope between handholes with a minimum 600 pound tensile strength.

I.T.S. rigid steel conduit, pull ropes and fittings, including labor and any additional work for installation is considered incidental to the cost of the railing.

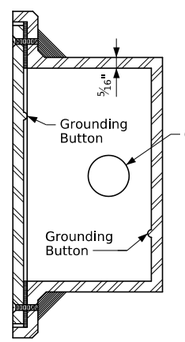

Section B-B

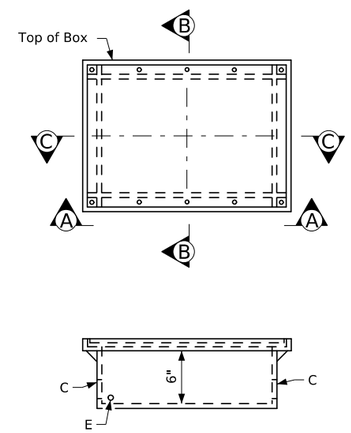

View A-A

LI-104 Junction Box

Watertight, Cast Iron - Flush Mount

Bossed For	Hole	For Conduit Size
5 Threads	C	2"∅ Rigid Steel
None	E	½"∅ Copper Pipe

NOTE:
The grounding buttons are to be blind drilled and tapped for 3/8"∅ x 0'-0¾" bolts.

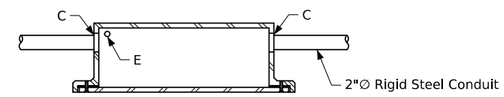

Section C-C

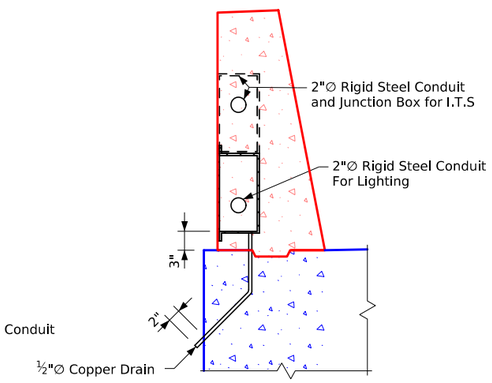

Section Thru Junction Box

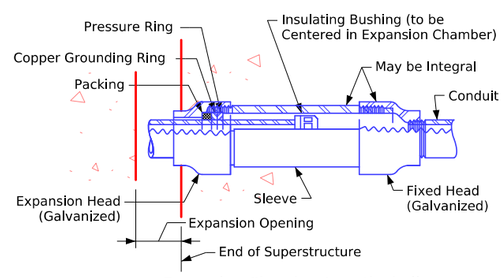

Expansion Chamber Length shall
Accommodate a Movement Length of 2" each way

Expansion Fitting Detail

(4 Required)

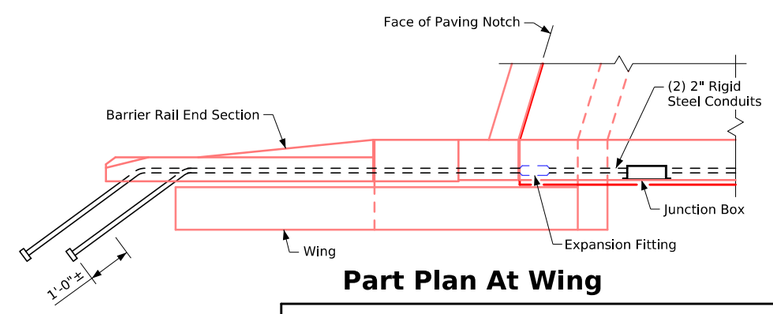

Part Plan At Wing

Design For Widening & Redecking of 16°54'00" Skew (LA)

188'-4" x 70'-0" Pretensioned
Prestressed Concrete Beam Bridge

59'-9 1/2" End Spans 68'-9" Interior Span

Conduit Details

STA. 1173+91.29, 42.00' Rt. (℄ I-80 Existing) Turn-in Date: October 2025

Polk County

IOWA DEPARTMENT OF TRANSPORTATION

Design No. 326 Design Sheet No. 37 of 47 FHWA No. 041970

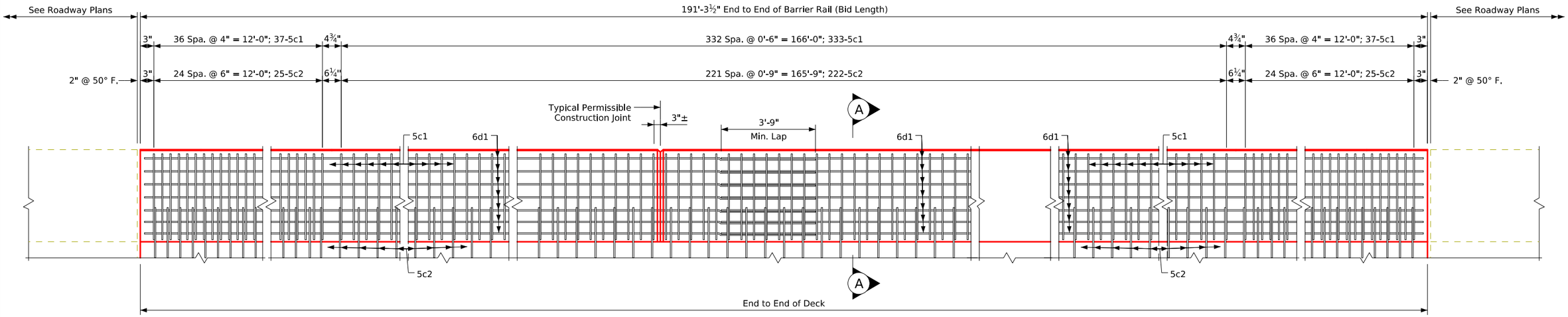

Elevation of North Barrier Rail

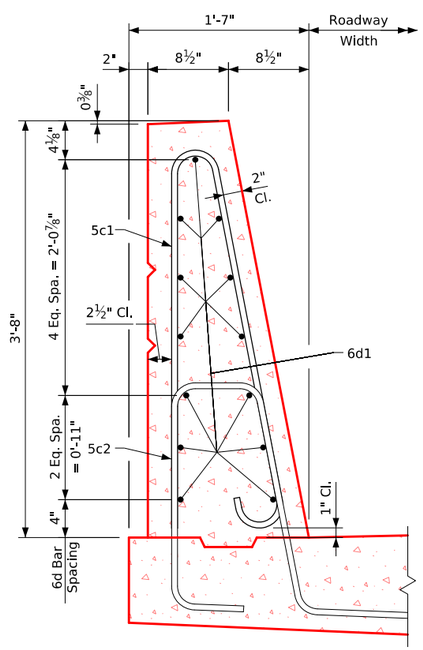

Part Section A-A

Note:
See Barrier Rail Rustication Details on Design Sheet No. 44.

Note:
See Barrier Rail Details on Design Sheet No. 40 for notes, reinforcing steel details, and quantities.

Design For Widening & Redecking of 16°54'00" Skew (LA)

188'-4" x 70'-0" Pretensioned Prestressed Concrete Beam Bridge

59'-9 1/2" End Spans 68'-9" Interior Span

North Barrier Rail Details

STA. 1173+91.29, 42.00' Rt. (℄ I-80 Existing) Turn-in Date: October 2025

Polk County

IOWA DEPARTMENT OF TRANSPORTATION

Design No. 326 Design Sheet No. 38 of 47 FHWA No. 041970

Correction 04-14: Added Stainless Steel Reinforcing Bar List and Changed 5c2 Bars to Stainless Steel.
Issued 11-07.
DeckRailBridges.dgn - 1020SD-1 -This Sheet Re-Issued 05-2024. Revised to Single Slope Barrier Shape. Sheet Format Update. (Sheet Number was Originally 1020SD).

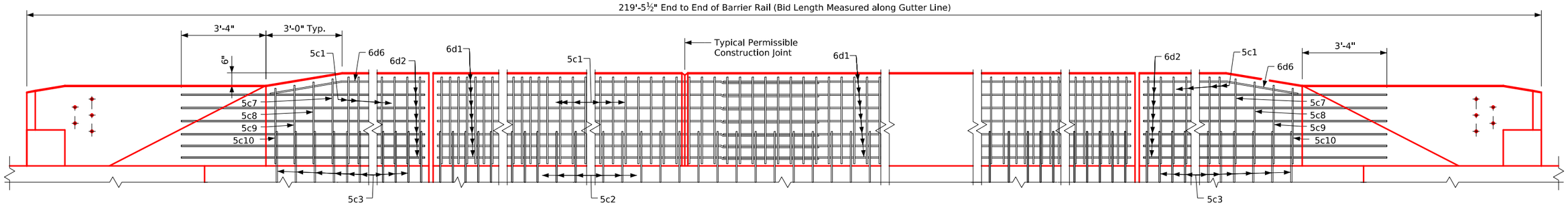

Elevation of South Barrier Rail

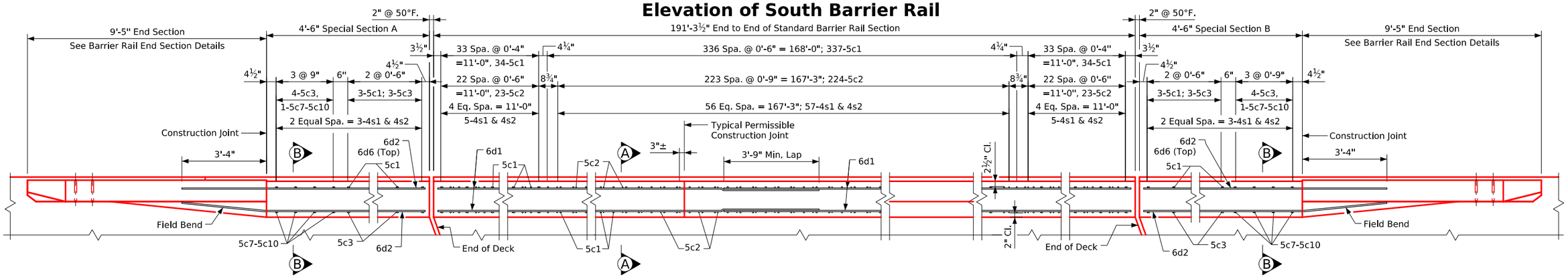

Part Section of South Barrier Rail

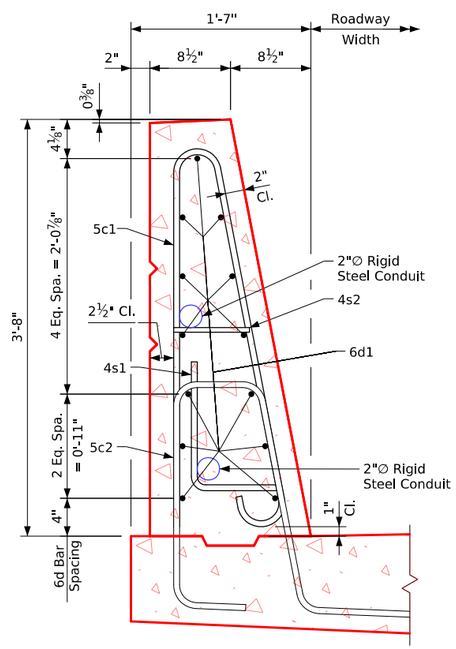

Part Section A-A

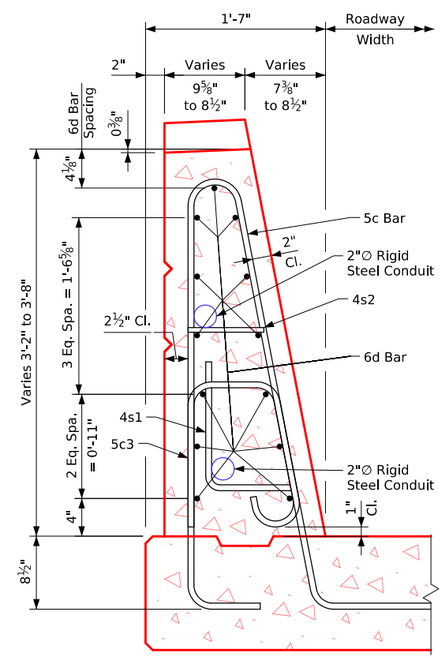

Part Section B-B

Note:
See Barrier Rail Rustication Details on Design Sheet No. 44.

Notes:
See Barrier Rail Details on Design Sheet No. 40 for notes, reinforcing steel details, and quantities.
Galvanized conduit shall not come into contact with the stainless steel reinforcing.

Design For Widening & Redecking of 16°54'00" Skew (LA)

188'-4" x 70'-0" Pretensioned
Prestressed Concrete Beam Bridge

59'-9 1/2" End Spans 68'-9" Interior Span

South Barrier Rail Details

STA. 1173+91.29, 42.00' Rt. (℄ I-80 Existing) Turn-in Date: October 2025

Polk County

IOWA DEPARTMENT OF TRANSPORTATION

Design No. 326 Design Sheet No. 39 of 47 FHWA No. 041970

FILE NO. 32061	ENGLISH	DESIGN TEAM KD/DS/TMS	Barrier Rail (TSS TL-5) - Stub Abut. w/Wing Ext. (1 of 2)	Standard Sheet 1020E-1 (Modified)	POLK COUNTY	PROJECT NUMBER IM-NHS-080-4(088)139--03-77	SHEET NUMBER V.39

4:42:24 PM 9/16/2025 ESORENS pw:\\pwhdruscen01:HDR_US_Central_01\Documents\IADOT\IDOT-NEMM_Stage_5B_FinalBrDes\6.0_CAD_BIM\6.2_WIP\Bridge\PPCB Design No. 326 - I-80EB over Four Mile Creek

Correction 04-14: Added Note to Include Reinforcing Steel to the Summary Quantity Sheet. Removed End Section Quantity from Bar List and Concrete Placement Summary.
Issued 11-07.
DeckRailBridges.dgn - 1020E-1 -This Sheet Re-issued 05-2024. Sheet Format Update. (Sheet Number was Originally 1020E).

Barrier Rail Notes:

Minimum clear distance from face of concrete to near reinforcing bar is to be 2" unless otherwise noted or shown.

The permissible construction joints are to be placed between vertical bars at a minimum spacing of 20 feet. Construction joint contact surfaces are to be coated with an approved bond breaker.

Cost of the joint sealer and bond breaker shall be considered incidental to other construction.

All barrier rail reinforcing steel is to be either epoxy coated or stainless steel as shown. The stainless steel reinforcing steel shall be deformed bar grade 60 meeting the requirements of Construction and Materials I.M. 452.

The concrete barrier rail is to be bid on a lineal foot basis. The number of linear feet of barrier rail installed will be paid for at the contract price per lineal foot based on plan quantities. Price bid for concrete barrier railing shall be full compensation for furnishing all material, excluding reinforcing steel, and all of the equipment and labor required to erect the rail in accordance with these plans and current specifications. If conduit is required in this plan the rigid steel conduit, junction boxes and fittings including labor and any additional work to do the installation is considered incidental to the cost of the railing.

The joint sealer shall be light gray nonsag latex caulking sealer marketed for outdoor use. No testing or certification is required.

Top of the barrier rail is to be parallel to the theoretical ℄ grade.

All exposed corners on the top of the barrier and all other corners 90° or sharper to be filleted with a ¾" dressed and beveled strip.

Cross sectional area of the Standard Sections of the barrier rail = 3.90 square feet, except the 3'-0" sloped ends at the end sections.

The galvanized steel conduit shall be securely tied at every 3'-0" intersection with the 4s1 bars to avoid contact with the stainless steel reinforcing.

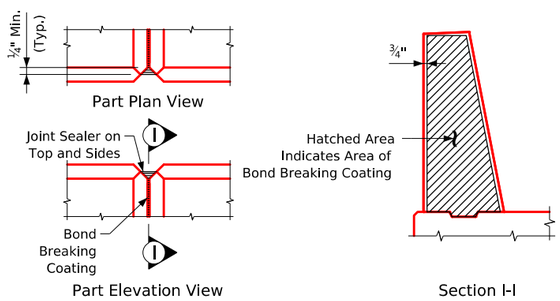

Barrier Rail Joint Details

Epoxy Coated Reinf. Steel - North Rail

Section	Bar	Location	Shape	No.	Length	Weight
Standard Section	5c1	Rail, Vertical		407	7'-6"	3,184
	6d1	Rail, Longitudinal		78	35'-0"	4,100
					Epoxy Reinf. Total Weight (lbs.)	7,284

Stainless Steel Reinf. - North Rail

Section	Bar	Location	Shape	No.	Length	Weight
Standard Section	5c2	Rail, Vertical		272	7'-9"	2,199
					Stainless Steel Reinf. Total Weight (lbs.)	2,199

Epoxy Coated Reinf. Steel - South Rail

Section	Bar	Location	Shape	No.	Length	Weight
Standard Section	5c1	Rail, Vertical		405	7'-6"	3,168
	6d1	Rail, Longitudinal		78	35'-0"	4,100
	4s1	Rail, Conduit		67	2'-3"	101
	4s2	Rail, Conduit		67	0'-8"	30
Special Section A	5c1	Rail, Vertical		3	7'-6"	23
	5c7	Rail, Vertical, Sloped Ends		1	7'-4"	8
	5c8	Rail, Vertical, Sloped Ends		1	7'-1"	7
	5c9	Rail, Vertical, Sloped Ends		1	6'-10"	7
	5c10	Rail, Vertical, Sloped Ends		1	6'-7"	7
	6d2	Rail, Longitudinal		12	7'-8"	138
	6d6	Rail, Longitudinal, Top		1	4'-3"	6
	4s1	Rail, Conduit		3	2'-3"	5
	4s2	Rail, Conduit		3	0'-8"	1
Special Section B	5c1	Rail, Vertical		3	7'-6"	23
	5c7	Rail, Vertical, Sloped Ends		1	7'-4"	8
	5c8	Rail, Vertical, Sloped Ends		1	7'-1"	7
	5c9	Rail, Vertical, Sloped Ends		1	6'-10"	7
	5c10	Rail, Vertical, Sloped Ends		1	6'-7"	7
	6d2	Rail, Longitudinal		12	7'-8"	138
	6d6	Rail, Longitudinal, Top		1	4'-3"	6
	4s1	Rail, Conduit		3	2'-3"	5
	4s2	Rail, Conduit		3	0'-8"	1
					Epoxy Reinf. Total Weight (lbs.)	7,803

Stainless Steel Reinf. - South Rail

Section	Bar	Location	Shape	No.	Length	Weight
Standard Section	5c2	Rail, Vertical		270	7'-9"	2,182
Special Section A	5c3	Rail, Vertical		7	7'-11"	58
Special Section B	5c3	Rail, Vertical		7	7'-11"	58
					Stainless Steel Reinf. Total Weight (lbs.)	2,298

Bent Bar Details

5c Bars

Bar	Dim. A	Dim. B	Dia. C
5c1	3'-3⅞"	3'-4½"	3¾"
5c7	3'-3"	3'-3⅝"	3⅞"
5c8	3'-1½"	3'-2⅛"	4¼"
5c9	3'-0"	3'-0⅝"	4½"
5c10	2'-10⅝"	2'-11⅛"	4⅞"

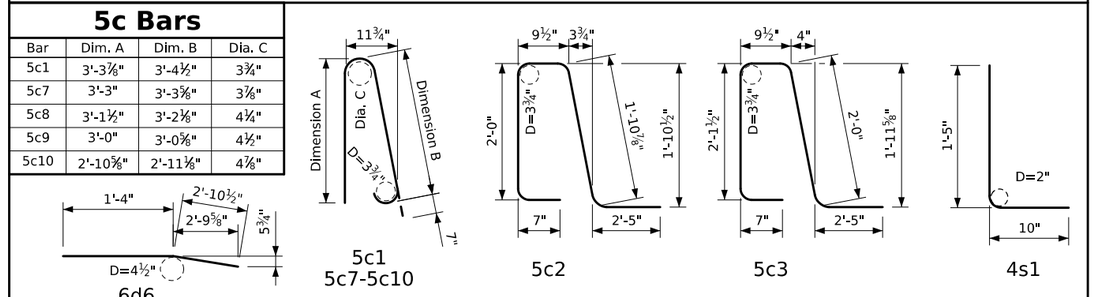

Note: All dimensions are out to out. D = Pin Diameter

Concrete Placement Summary

Section	Total
North Rail Standard Section 191'-3½" at 0.144 cu. yd. per ft.	27.5
South Rail Standard Section 191'-3½" at 0.144 cu. yd. per ft.	27.5
Δ Special Section A 4'-6" at 0.144 cu. yd. per ft.	0.6
Δ Special Section B 4'-6" at 0.144 cu. yd. per ft.	0.6
Total (cu. yd.)	56.2

Note: Δ Deduct 0.021 cu. yd. for one sloped end.

Concrete Barrier Rail Quantities

Item	Unit	Quantity
Concrete Barrier Railing, 3'-8"	L.F.	410.8

Note:
See Barrier Rail Details on Design Sheet Nos. 38 and 39 for details and sections.

Design For Widening & Redecking of 16°54'00" Skew (LA)

188'-4" x 70'-0" Pretensioned Prestressed Concrete Beam Bridge

59'-9 1/2" End Spans 68'-9" Interior Span

Barrier Rail Details

STA. 1173+91.29, 42.00' Rt. (℄ I-80 Existing) Turn-in Date: October 2025

Polk County

IOWA DEPARTMENT OF TRANSPORTATION

Design No. 326 Design Sheet No. 40 of 47 FHWA No. 041970

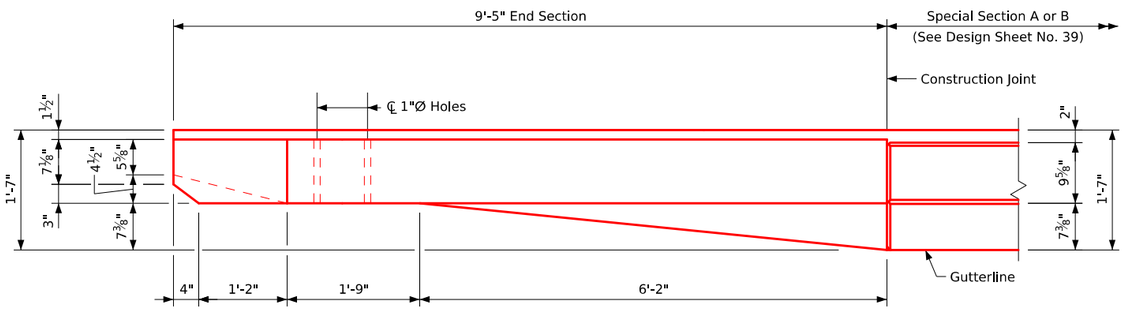

PART PLAN VIEW

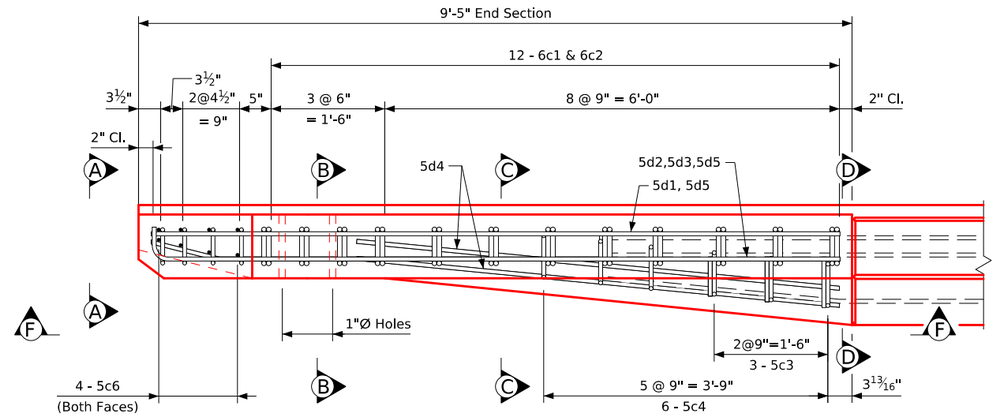

PART VIEW E-E

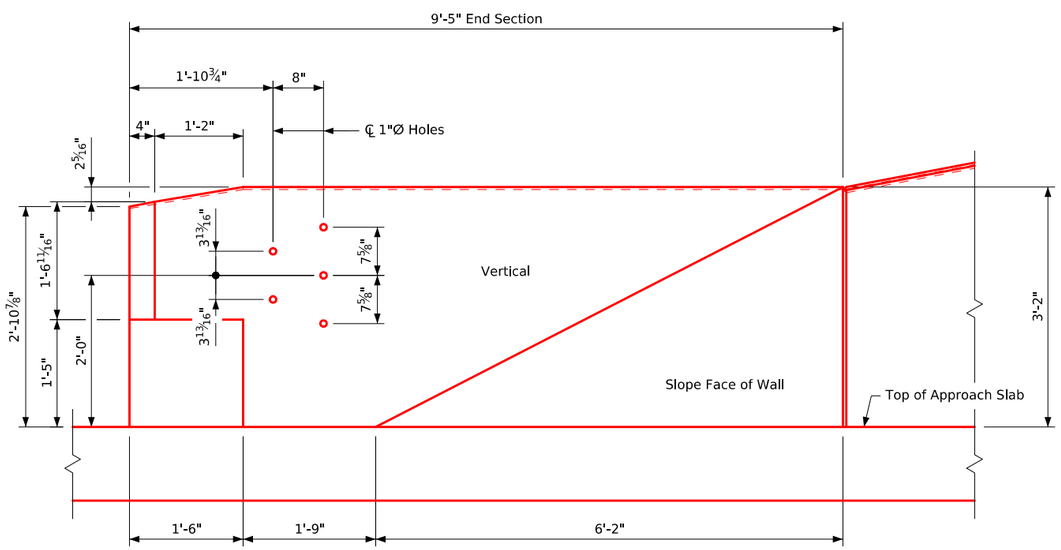

PART ELEVATION VIEW

Provide 5 holes formed with 1"Ø plastic conduit.
Cost to be included in price of bid for Concrete Barrier Railing.

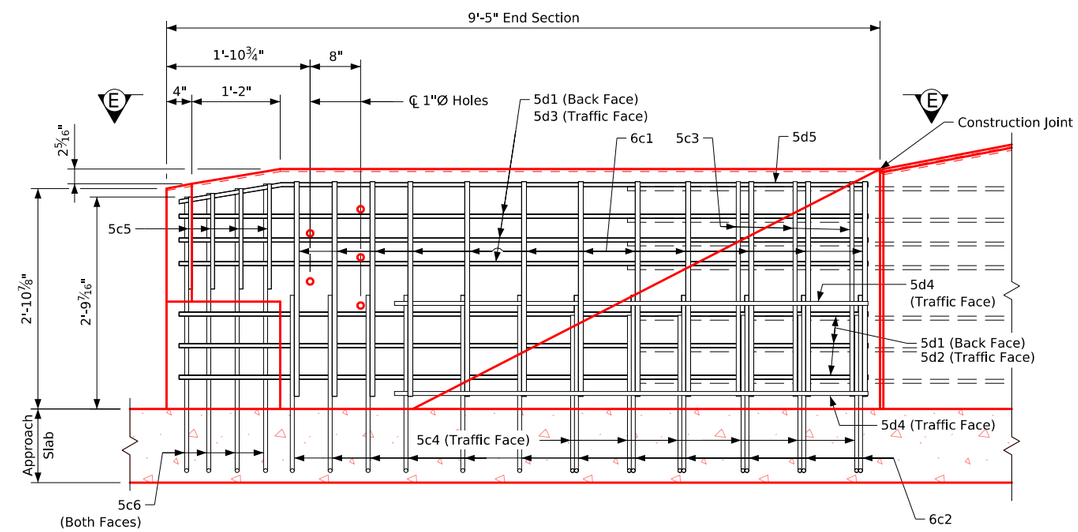

PART VIEW F-F

Notes:
Construction joint between top of approach slab and barrier rail is roughened concrete.
For Bar List, Bent Bar Details, View A-A, Sections B-B, C-C, and D-D see Design Sheet No. 42.

Design For Widening & Redecking of 16°54'00" Skew (LA)
188'-4" x 70'-0" Pretensioned
Prestressed Concrete Beam Bridge
59'-9 1/2" End Spans 68'-9" Interior Span
Barrier Rail End Section Details
STA. 1173+91.29, 42.00' Rt. (℄ I-80 Existing) Turn-in Date: October 2025
Polk County
IOWA DEPARTMENT OF TRANSPORTATION
Design No. 326 Design Sheet No. 41 of 47 FHWA No. 041970

FILE NO. 32061	ENGLISH	DESIGN TEAM KD/DS/TMS	POLK COUNTY	PROJECT NUMBER IM-NHS-080-4(088)139--03-77	SHEET NUMBER V.41

4:42:25 PM 9/16/2025 ESORENS pw:\\pwhdruscen01:HDR_US_Central_01\Documents\IADOT\IDOT-NEMM_Stage_5B_FinalBrDes\6.0_CAD_BIM\6.2_WIP\Bridge\PPCB Design No. 326 - I-80EB over Four Mile Creek

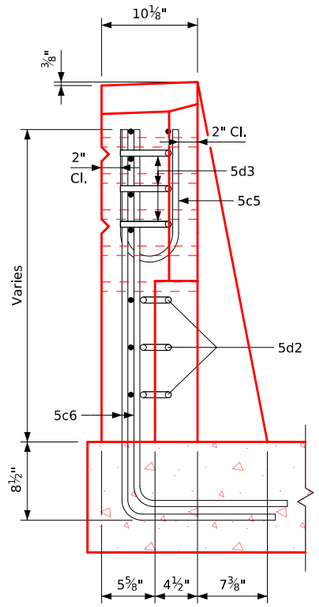

View A-A

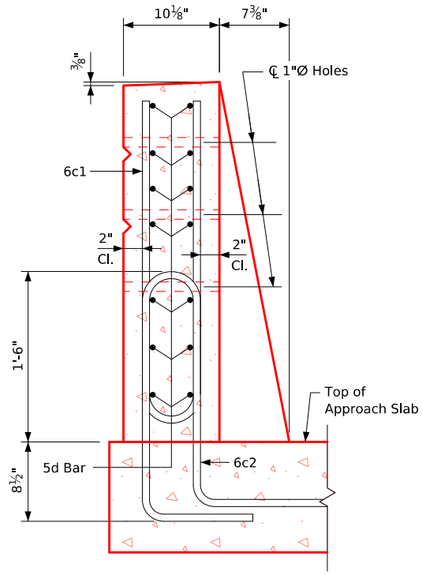

Section B-B

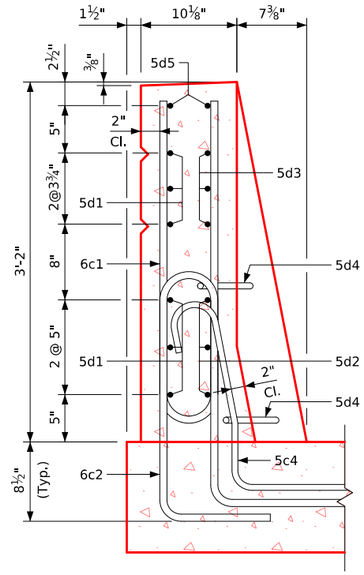

Section C-C

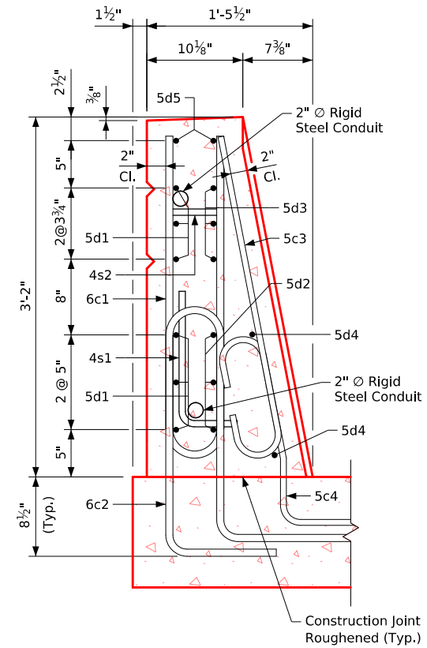

Section D-D

Epoxy Coated Reinforcing Steel - One End Section

Bar	Location	Shape	No.	Length	Weight
6c1	Rail, Vertical		12	5'-11"	107
5c3	Rail, Vertical (Traffic Face)		3	3'-5"	11
5c5	Rail, Vertical (End)		4	Varies	12
5d1	Rail, Horizontal (Back Face)		6	9'-1"	57
5d2	Rail, Horizontal (Traffic Face)		3	9'-1"	28
5d3	Rail, Horizontal (Traffic Face)		3	9'-7"	30
5d4	Rail, Horizontal (Traffic Face)		2	6'-3"	13
5d5	Rail, Horizontal (Top)		2	9'-1"	19
4s1	Rail, Conduit		2	2'-3"	3
4s2	Rail, Conduit		2	0'-8"	1
				Epoxy Reinforcing Total Weight (lbs.)	281

Stainless Steel Reinforcing Steel - One End Section

Bar	Location	Shape	No.	Length	Weight
6c2	Rail, Vertical		12	8'-1"	146
5c4	Rail, Vertical (Traffic Face)		6	4'-7"	29
5c6	Rail, Vertical (End)		8	Varies	48
				Stainless Steel Reinforcing Total Weight (lbs.)	223

Concrete Placement Summary

Section	Total
Barrier Rail, One End Section	1.0 cu. yd.

Bent Bar Details

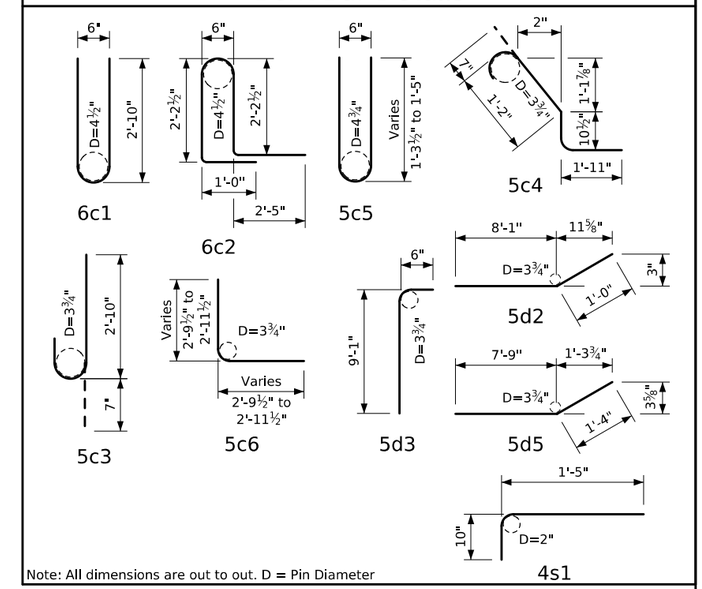

Note: All dimensions are out to out. D = Pin Diameter

Notes:
Construction joint between top of approach slab and barrier rail is roughened concrete
For notes and locations of View A-A, Sections B-B, C-C, and D-D see Design Sheet No. 41.
Galvanized conduit shall not come into contact with the stainless steel reinforcing

Note:
See Barrier Rail Rustication Details on Design Sheet No. 44.

Design For Widening & Redecking of 16°54'00" Skew (LA)

188'-4" x 70'-0" Pretensioned Prestressed Concrete Beam Bridge

59'-9 1/2" End Spans 68'-9" Interior Span

Barrier Rail End Section Details

STA. 1173+91.29, 42.00' Rt. (℄ I-80 Existing) Turn-in Date: October 2025

Polk County

IOWA DEPARTMENT OF TRANSPORTATION

Design No. 326 Design Sheet No. 42 of 47 FHWA No. 041970

FILE NO. 32061	ENGLISH	DESIGN TEAM KD/DS/TMS	POLK COUNTY	PROJECT NUMBER IM-NHS-080-4(088)139--03-77	SHEET NUMBER V.42

4:42:26 PM 9/16/2025 ESORENS pw:\\pwhdruscen01:HDR_US_Central_01\Documents\IADOT\IDOT-NEMM_Stage_5B_FinalBrDes\6.0_CAD_BIM\6.2_WIP\Bridge\PPCB Design No. 326 - I-80EB over Four Mile Creek

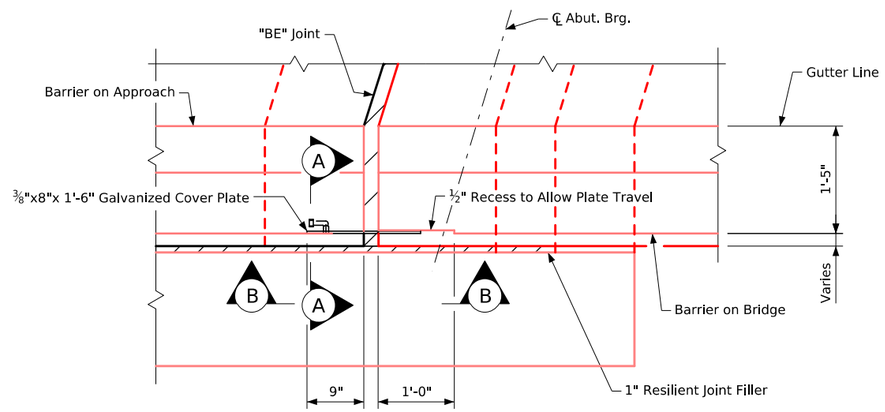

Part Plan View

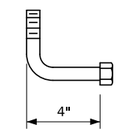

Bent Bolt Detail

Note:
Coordinate cover plate installation at North Barrier Rail with Roadway Plans

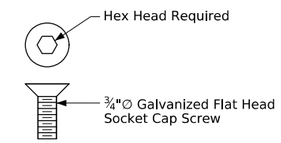

Cap Screw Detail

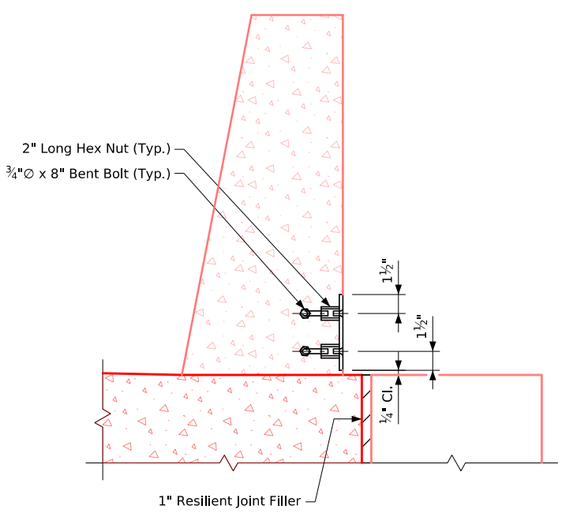

Section A-A

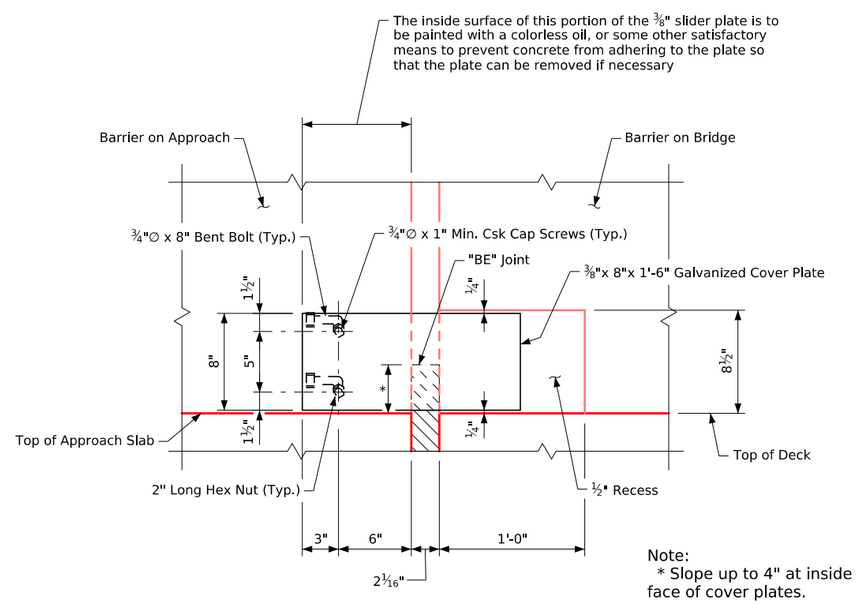

Note:
* Slope up to 4" at inside face of cover plates.

Section B-B

Notes:
The material used for the cover plates is to be ASTM A36 steel. The bolts shall meet the requirements of ASTM A307. The plates, bolts, nuts and cap screws are to be galvanized in accordance with Article 4100.07 of the Standard Specifications.
Contractor to note that the cap screw anchorage system for the ⅜" slider plates is always to be placed on the approach slab side.
It is intended that the recessed areas be formed so that when the plates are installed the plates will be able to move freely in the recessed areas.
Cap screws shall be flush with top of the plate.
All costs associated with furnishing and installing the cover plates shall be included in the price bid for "Concrete Barrier Railing, 3'-8".

Design For Widening & Redecking of 16°54'00" Skew (LA)

188'-4" x 70'-0" Pretensioned Prestressed Concrete Beam Bridge

59'-9 1/2" End Spans 68'-9" Interior Span

Barrier Rail Cover Plate Details

STA. 1173+91.29, 42.00' Rt. (℄ I-80 Existing) Turn-in Date: October 2025

Polk County

IOWA DEPARTMENT OF TRANSPORTATION

Design No. 326 Design Sheet No. 43 of 47 FHWA No. 041970

HDR

FILE NO. 32061	ENGLISH	DESIGN TEAM KD/DS/TMS	POLK COUNTY	PROJECT NUMBER IM-NHS-080-4(088)139--03-77	SHEET NUMBER V.43

4:42:26 PM 9/16/2025 ESORENS pw:\\pwhdruscen01:HDR_US_Central_01\Documents\IADOT\IDOT-NEMM_Stage_5B_FinalBrDes\6.0_CAD_BIM\6.2_WIP\Bridge\PPCB Design No. 326 - I-80EB over Four Mile Creek

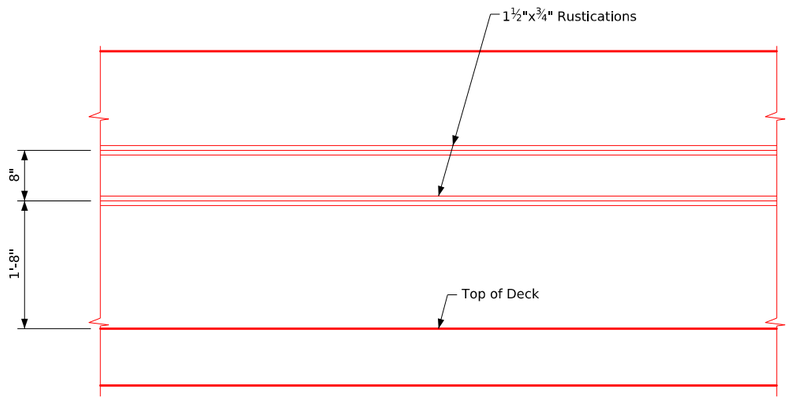

Part Outside Elevation of Standard Barrier Rail

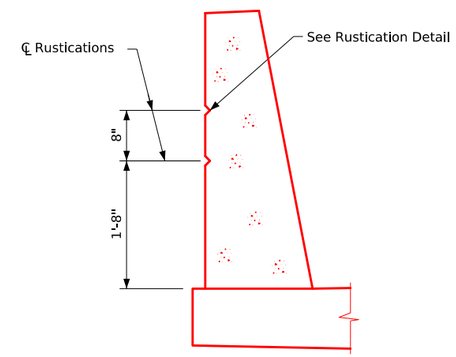

Part Section Through Standard Barrier Rail

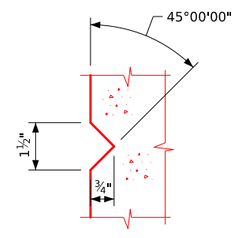

Rustication Detail

Note:
For Concrete Rustication notes, see Design Sheet 4.
Rustications extend the full length of bridge barrier, including barrier end section.

Design For Widening & Redecking of 16°54'00" Skew (LA)

188'-4" x 70'-0" Pretensioned Prestressed Concrete Beam Bridge

59'-9 1/2" End Spans 68'-9" Interior Span

Barrier Rail Rustication Details

STA. 1173+91.29, 42.00' Rt. (℄ I-80 Existing) Turn-in Date: October 2025

Polk County

IOWA DEPARTMENT OF TRANSPORTATION

Design No. 326 Design Sheet No. 44 of 47 FHWA No. 041970

HDR

A Check Shall be Made at the Subdrain Outlet to Insure that it is Draining Properly During the Backfill Flooding Process.

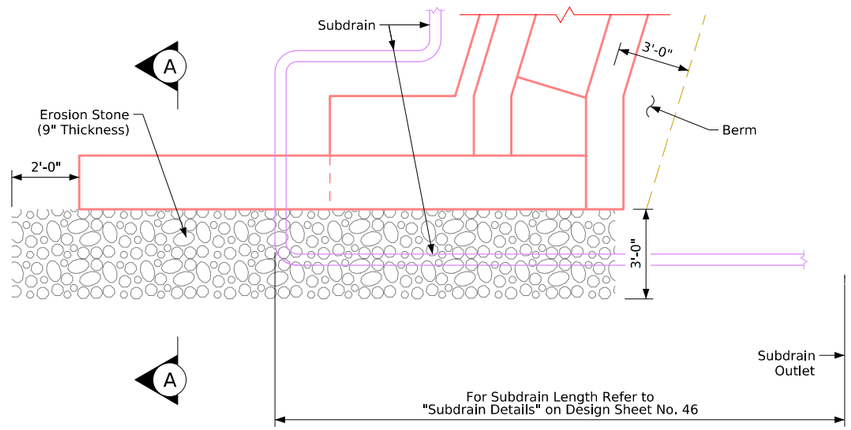

Top View of Wing Armoring with Wing Extension

(Shown at extended abutment end, Existing abutment end similar)

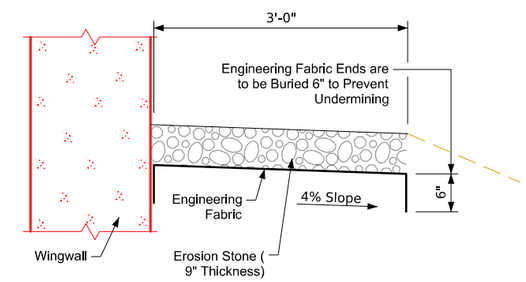

Section A-A

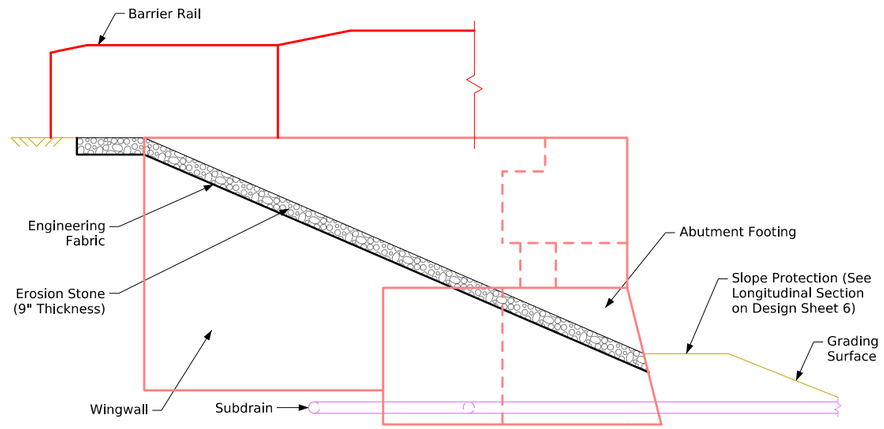

Profile View of Wing Armoring with Wing Extension

General Notes:

Erosion stone shall be placed along the sides of the wings and abutment footing as shown in Section A-A. This is typical at each corner of the bridge unless otherwise noted in the plans. The erosion stone at these locations shall be underlayed with engineering fabric in accordance with Article 4196.01, B, 3, of the Standard Specifications.

The erosion stone shall be in accordance with Section 4130, of the Standard Specifications. Material passing the 3 inch screen but 100% retained on a 1 inch screen may be used as choke stone.

The erosion stone shall be deposited, spread, consolidated and shaped by mechanical or hand methods that will provide uniform 9 inch depth and density and provide uniform surface appearance.

Payment for the bridge wing armoring will be bid per square yard. Cost will include engineering fabric, erosion stone, excavation, shaping, and compaction to dimensions shown in these plans. Bid item shall be "Bridge Wing Armoring - Erosion Stone".

Design For Widening & Redecking of 16°54'00" Skew (LA)

188'-4" x 70'-0" Pretensioned
Prestressed Concrete Beam Bridge

59'-9 1/2" End Spans 68'-9" Interior Span

Bridge Wing Armoring Details

STA. 1173+91.29, 42.00' Rt. (℄ I-80 Existing) Turn-in Date: October 2025

Polk County

IOWA DEPARTMENT OF TRANSPORTATION

Design No. 326 Design Sheet No. 45 of 47 FHWA No. 041970

HDR

FILE NO. 32061	ENGLISH	DESIGN TEAM KD/DS/TMS	POLK COUNTY	PROJECT NUMBER IM-NHS-080-4(088)139--03-77	SHEET NUMBER V.45

Note: Section A-A and Section B-B is shown on Abutment Backfill Details Sheet on Design Sheet No. 47.

Subdrain Notes:

This plan sheet shows details for placing all subdrains and subdrain outlets required for this structure.

The subdrains shall be 4"Ø and shall be in accordance with Article 4143.01, B, of the Standard Specifications.

The subdrain outlet shall consist of a length of pipe with a removable rodent guard as detailed on this sheet. The length of the outlet pipe shall be determined by the revetment and it's placement location. The Contractor is to insure the outlet pipe is adequately strong enough and will not be damaged when revetment is placed. A check will be made at the subdrain outlet to insure that the subdrain is not damaged and is draining properly during the backfill flooding process. If a metal outlet pipe is used, it shall be 6"Ø and coupled to the 4"Ø subdrain in one of the two following ways.

- Use an inside fit reducer coupler (coupler must be inserted a minimum of 1'-0" into the metal outlet pipe).
- Insert 1'-0" of the 4"Ø subdrain into the 6"Ø metal outlet pipe, then fully seal the entire opening with grout.

The cost of furnishing and placing subdrain (including excavation), granular backfill, porous backfill, and subdrain outlet is to be included in the price bid for "Structural Concrete (Bridge)". No extra payment will be made.

The dimensions shown for the proposed subdrains are based on the proposed grading layout of bridge berms. The dimensions shown are for estimating only. Required lengths and general locations of subdrains are subject to change due to field adjustments of the grading layout.

Subdrain Outlet Elevations

Location	Elevation
Northwest	831.6 ±
Southwest	831.4 ±
Northeast	832.8 ±
Southeast	832.2 ±

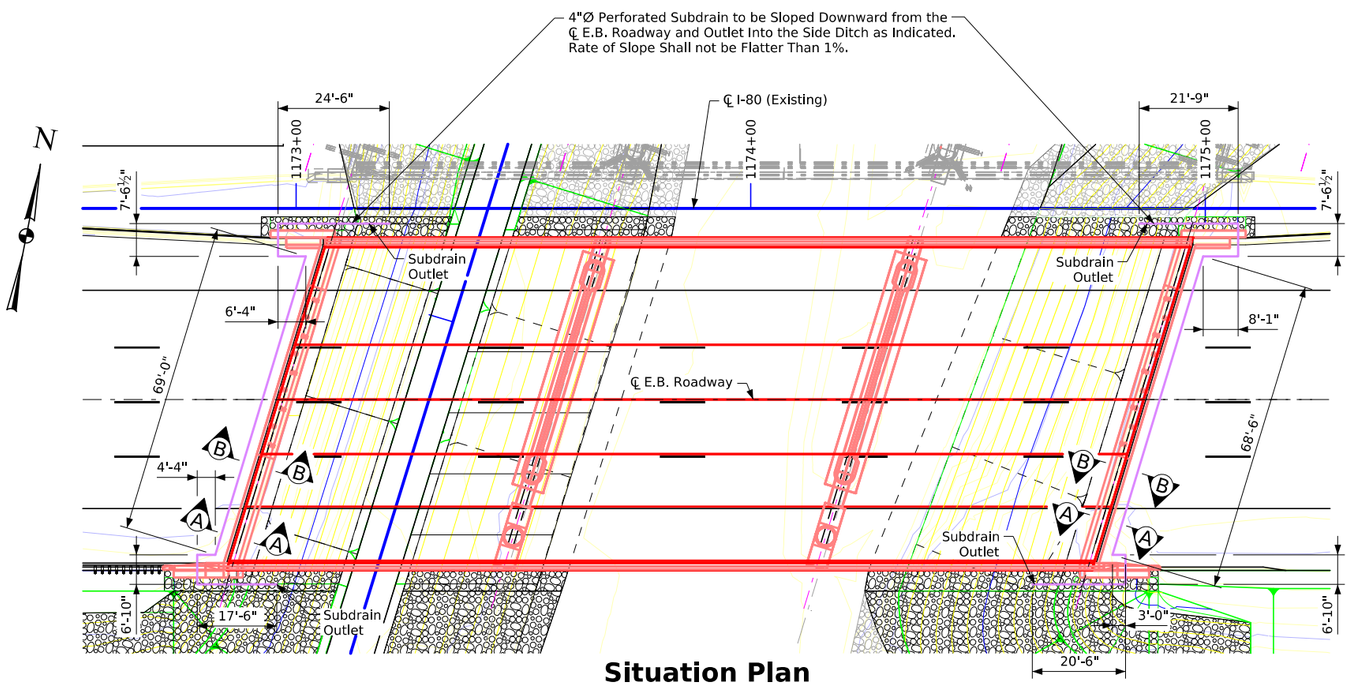

Situation Plan

Showing Subdrain Locations

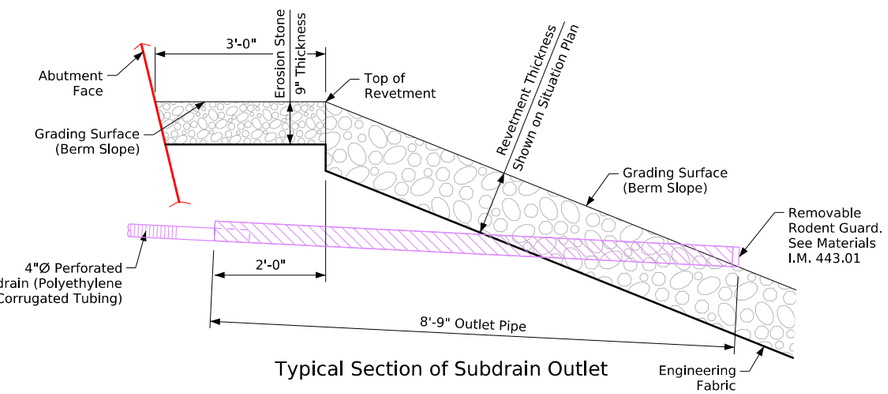

Typical Section of Subdrain Outlet

Revetment Stone (Embedded) Outlet Details

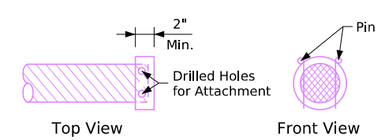

Removable Rodent Guard Details

Erosion Stone (Embedded) Outlet Details

Design For Widening & Redecking of 16°54'00" Skew (LA)

188'-4" x 70'-0" Pretensioned Prestressed Concrete Beam Bridge

59'-9 1/2" End Spans — 68'-9" Interior Span

Subdrain Details

STA. 1173+91.29, 42.00' Rt. (℄ I-80 Existing) — Turn-in Date: October 2025

Polk County

IOWA DEPARTMENT OF TRANSPORTATION

Design No. 326 — Design Sheet No. 46 of 47 — FHWA No. 041970

Revised 10-14 - Two Additional Foreslope Protection Details were Added Outside of the Border to Show Revetment up to Back of Abutment Footing.
Revised 06-2024: Changed Control Point text (was Bench Mark).
ForeSlopeProtectionBridges.dgn - 1007C - This Sheet Issued 06-02 for Water Crossings.
ForeSlopeProtectionBridges.dgn - 1007C - This Sheet Redrawn 07-23.

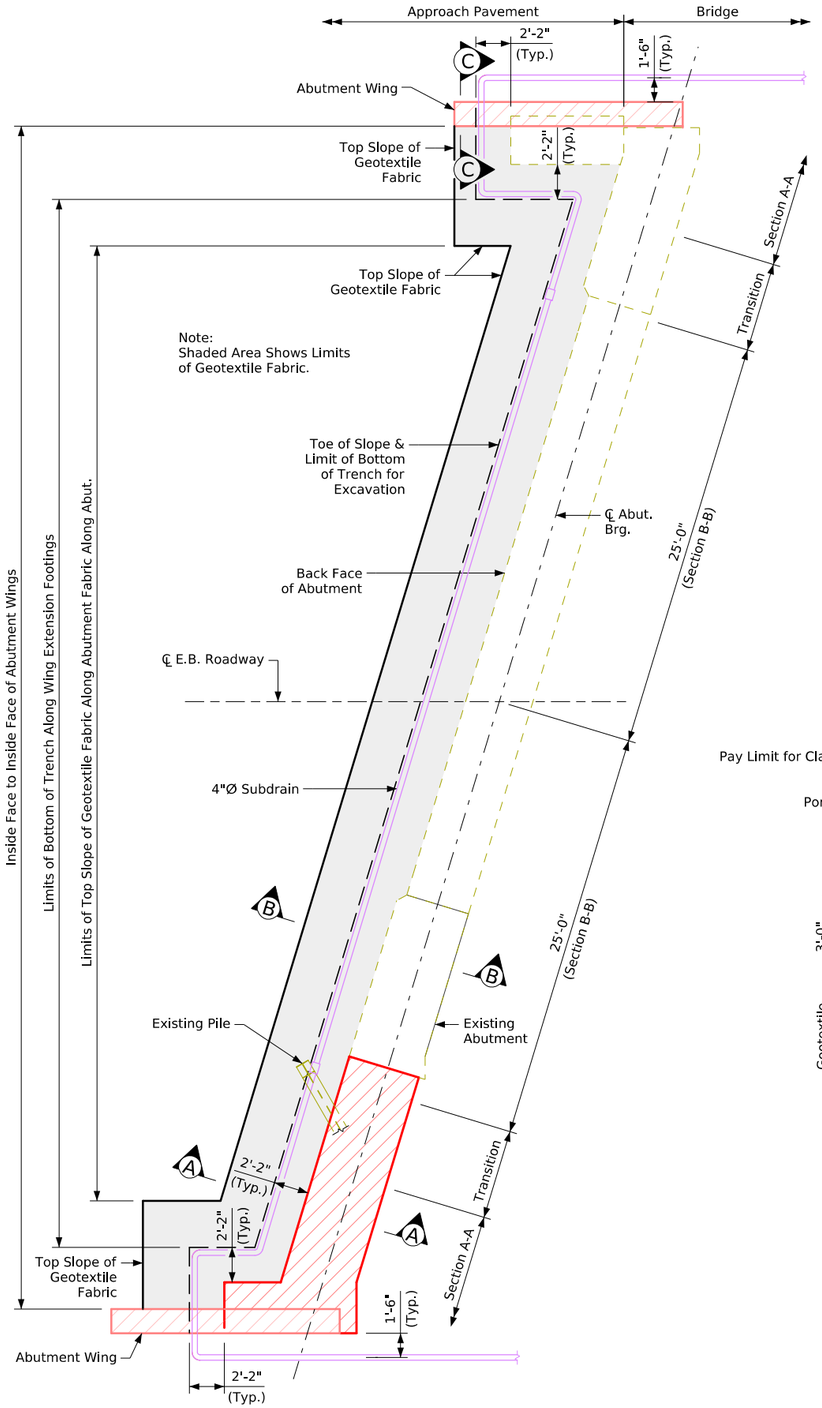

Abutment Plan with Wing Extensions

(W. Abut. shown, E. Abut. Similar)

Abutment Backfill Process:

The base of the excavation subgrade behind the abutment is to be graded with a 4% slope away from the abutment footing and a 2% cross slope in the direction of the subdrain outlet except at locations of transition between Section A-A, Section B-B and Section C-C where subdrain shall follow transition slope. This excavation shaping is to be done prior to beginning installation of the geotextile and backfill material.

After the subgrade has been shaped, the geotextile fabric shall be installed in accordance with the details shown. The fabric is intended to be installed in the base of the excavation and extended vertically up the abutment backwall, abutment wing walls, and excavation face to a height that will be approximately 1 to 2 ft higher than the height of the porous backfill placement at existing abutment and 6" min. above new backwall at widened abutment as shown in the "Backfill Details" on this sheet. The strips of the fabric placed shall overlap approximately 1 ft and shall be pinned in place. The fabric shall be attached to the abutment by using lath folded in the fabric and secured to the concrete with shallow concrete nails. The fabric placed against the excavation face shall be pinned.

When the fabric is in place, the subdrain shall be installed directly on the fabric at the toe of the rear excavation slope. A slot will need to be cut in the fabric at the point where the subdrain exits the fabric near the end of the abutment wing wall.

Porous backfill is then placed and leveled, no compaction is required.

The remaining work involves backfilling with floodable backfill, surface flooding, and vibratory compaction behind the widened new abutment. The floodable backfill material shall be in accordance with the Standard Specifications. The floodable backfill shall be placed in individual lifts, surface flooded, and compacted with vibratory compaction to ensure full consolidation. Limit the loose lifts to no more than 2 ft of thickness.

Start surface flooding for each floodable backfill lift at the high point of the subdrain and progress to the low point where the subdrain exits the fabric. To ensure uniform surface flooding, water running full in a 2"Ø hose should be sprayed in successive 6 ft to 8 ft increments for 5 minutes within each increment.

Floodable backfill lift placement, flooding, and compaction shall progress until the required full thickness of the abutment backfill has been completed.

Water required for flooding, subdrains, porous backfill, floodable backfill, and geotextile fabric furnished at the bridge abutments will not be measured separately for payment.

The cost of water required for flooding, subdrains, porous backfill, floodable backfill, and geotextile fabric furnished at the bridge abutments shall be included in the contract unit price bid for "High Performance Structural Concrete".

Notes:

Subdrain shall slope downward 2% from ℄ approach roadway when outletting both sides of the abutment except at locations of transition between Section A-A, Section B-B and Section C-C where subdrain shall follow transition slope.

The geotextile fabric shall be in accordance with Article 4196.01, B, 6 of the Standard Specifications. If the engineering fabric is lapped the laps shall be a minimum of 1 ft in length, shingle fashion with up slope lap piece on top and stapled for continuity.

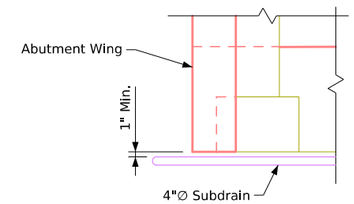

Section C-C

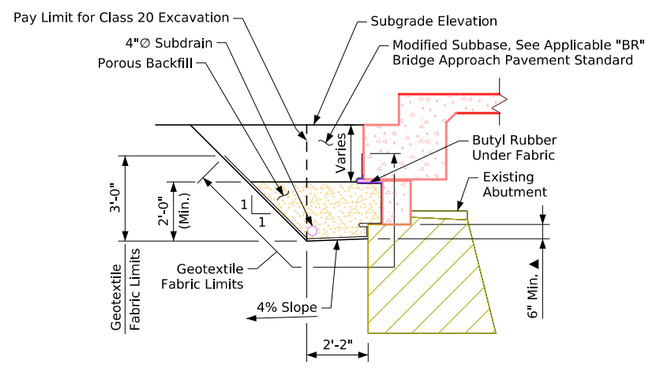

Section B-B

Backfill Details

Note:
Geotextile fabric will be attached to face of abutment footing, backwall, diaphragm and wings.
▲ Dimension varies due to subdrain slope.

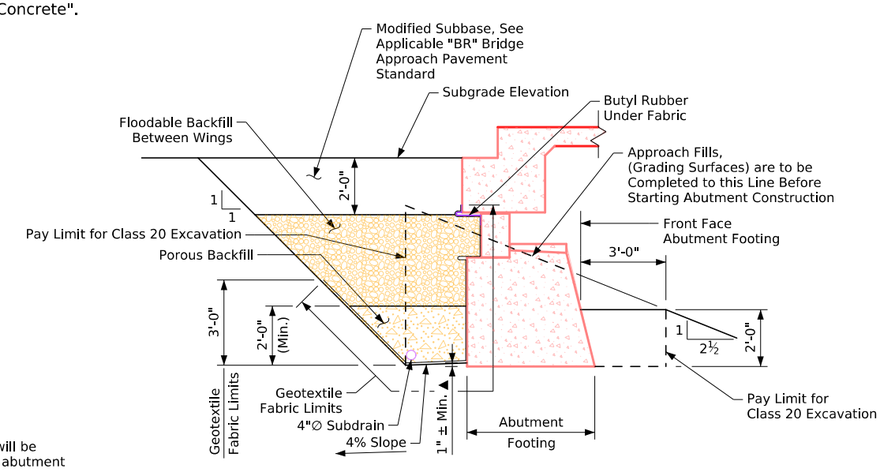

Section A-A

Backfill Details

Note:
For Details not Shown on this Sheet which are Pertinent to this Structure See Subdrain Details Sheet on Design Sheet No. 46.

Design For Widening & Redecking of 16°54'00" Skew (LA)

188'-4" x 70'-0" Pretensioned Prestressed Concrete Beam Bridge

59'-9 1/2" End Spans 68'-9" Interior Span

Abutment Backfill Details

STA. 1173+91.29, 42.00' Rt. (℄ I-80 Existing) Turn-in Date: October 2025

Polk County

IOWA DEPARTMENT OF TRANSPORTATION

Design No. 326 Design Sheet No. 47 of 47 FHWA No. 041970

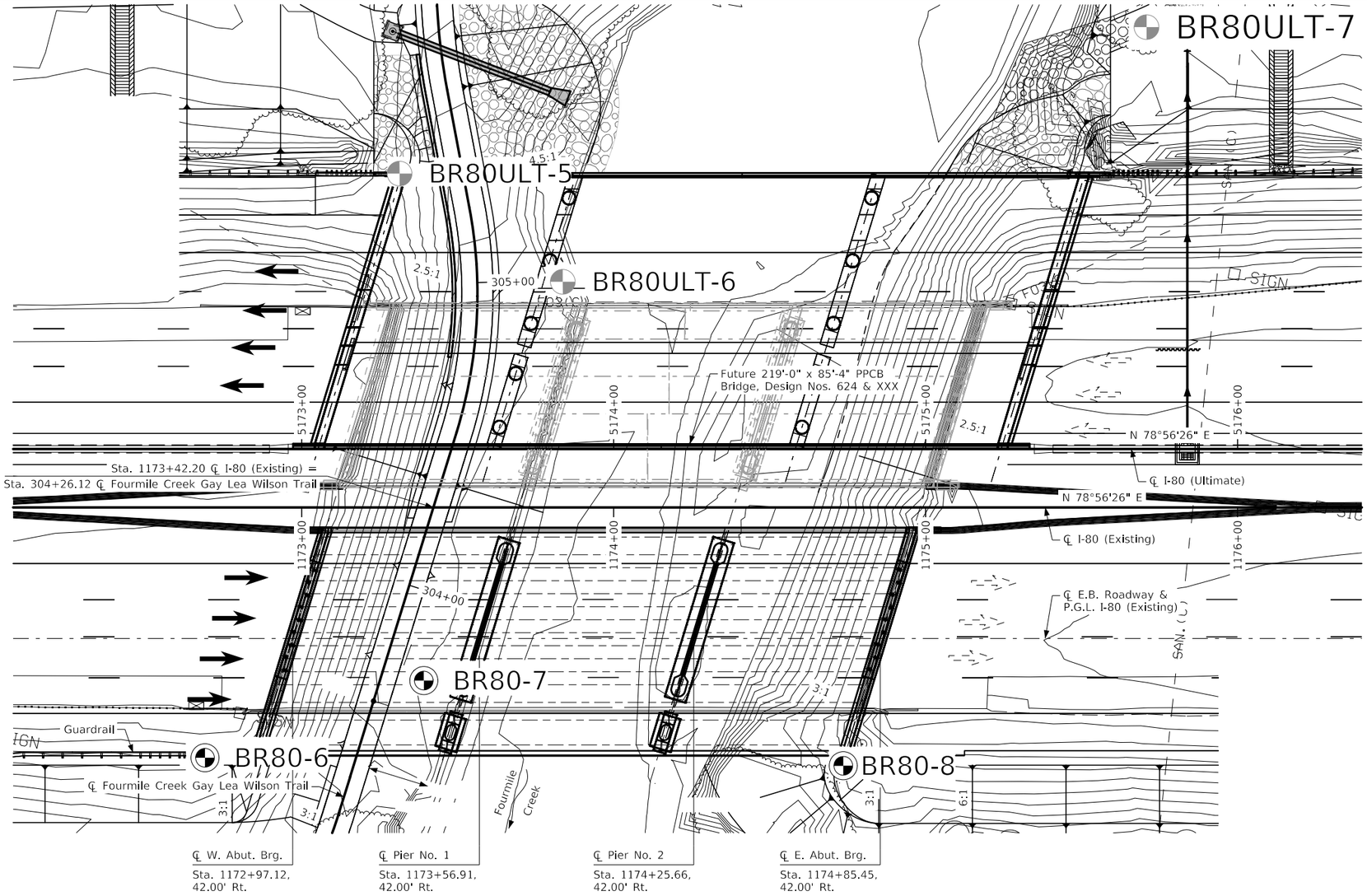

LEGEND

CURRENT BORING

PREVIOUS PROJECT BORING

THIS SHEET SHOWS BORINGS BR80ULT-5, BR80ULT-6 AND BR80ULT-7 WHICH ARE PROVIDED AS ADDITIONAL INFORMATION

N

0 20
Scale In Feet

Location

I-80 E.B. over Fourmile Creek
T-79N R-23W
Section 17
Delaware Township
Polk County
FHWA No. 41970
Bridge Maint. No. 7739.4R080
Latitude 41.656365°
Longitude -93.545922°

THIS SHEET IS INCLUDED TO SHOW SOIL INFORMATION.
DETAILS AND NOTES SHOWN ELSEWHERE IN THESE PLANS SHALL BE USED FOR STRUCTURE CONSTRUCTION.

GEOTECHNICAL DESIGN

LICENSED PROFESSIONAL ENGINEER
BRIAN T. HAVENS
13863
IOWA

I hereby certify that this engineering document was prepared by me or under my direct personal supervision and that I am a duly licensed Professional Engineer under the laws of the State of Iowa.

Brian T. Havens — 5/7/2025
Signature — Date

BRIAN T. HAVENS
Printed or Typed Name

My license renewal date is December 31, 2026

Pages or sheets covered by this seal: SPS.1 AND SPS.2

Design For Widening & Redecking of 16°54'00" Skew (LA)

188'-4" x 70'-0" Pretensioned Prestressed Concrete Beam Bridge

59'-9 1/2" End Spans — 68'-9" Interior Span

Soil Profile Sheet

STA. 1173+91.29, 42.00' Rt. (℄ I-80 Existing) — Turn-in Date: October 2025

Polk County

IOWA DEPARTMENT OF TRANSPORTATION

Design No. 326 — Design Sheet No.1 of 2 — FHWA No. 41970

FILE NO. 32061	ENGLISH	DESIGN TEAM HDR	POLK COUNTY	PROJECT NUMBER IM-NHS-080-4(088)139--03-77	SHEET NUMBER SPS.1

1:38:00 PM 12/30/2024 DKOZAK pw:\\pwhdruscen01:HDR_US_Central_01\Documents\IADOT\IDOT-NEMM_Stage_5_Final_Geo\6.0_CAD_BIM\6.2_WIP\WorkSet\Dgn\Soils\(88) sps files\SPS.77080088_326_HDR_Z08

SHELBY TUBE CORE DATA

CORE NO.	BR80-6-B3	BR80-6-C1	BR80-8-C1	BR80-8-E2
DEPTH IN FEET	6.5'-8.5'	11.5'-13.5'	4.0'-6.0'	19.0'-21.0'
CLASSIFICATION (AASHTO)	-	-	-	-
COEFF.CONSOL. (SQ.FT /DAY)	-	-	-	-
TRIAXIAL COMPRESSION	-	UC	UC	UC
COHESION - PSF	-	1120	5689	2957
FRICTION COEFF.	-	-	-	-
MOISTURE CONTENT %	17	26	20	19
DRY DENSITY - PCF	113	86	103	109

CU-CONSOLIDATED UNDRAINED
UU-UNCONSOLIDATED UNDRAINED
UC-UNCONFINED COMPRESSION (c=1/2 Qu)

Water Level Observations (Ft.)				
Boring No.	Date Drilled	While Drilling	End of Drilling	After 24 Hours
BR80-6	12/06/2021	16.0'	-	-
BR80-7	08/12/2021	14.0'	-	-
BR80-8	08/25/2021	12.0'	-	-

LEGEND

WATER
DRY
PLUGGED
MOISTURE
SHELBY
BLOW COUNT
DENS. CORE
SAMPLE

BLOW COUNT
LAYER - NO. BLOWS
B2 5

DIAMOND CORE
SAND
GRAVELLY SAND
BOULDERS

SOILS BOOK NO. _ _ _ _ _ .
SOIL REMEDIATION AREA
LIMESTONE (LS.)
BROKEN & WEATHERED LS.
SANDSTONE
SHALE
SANDY SOIL

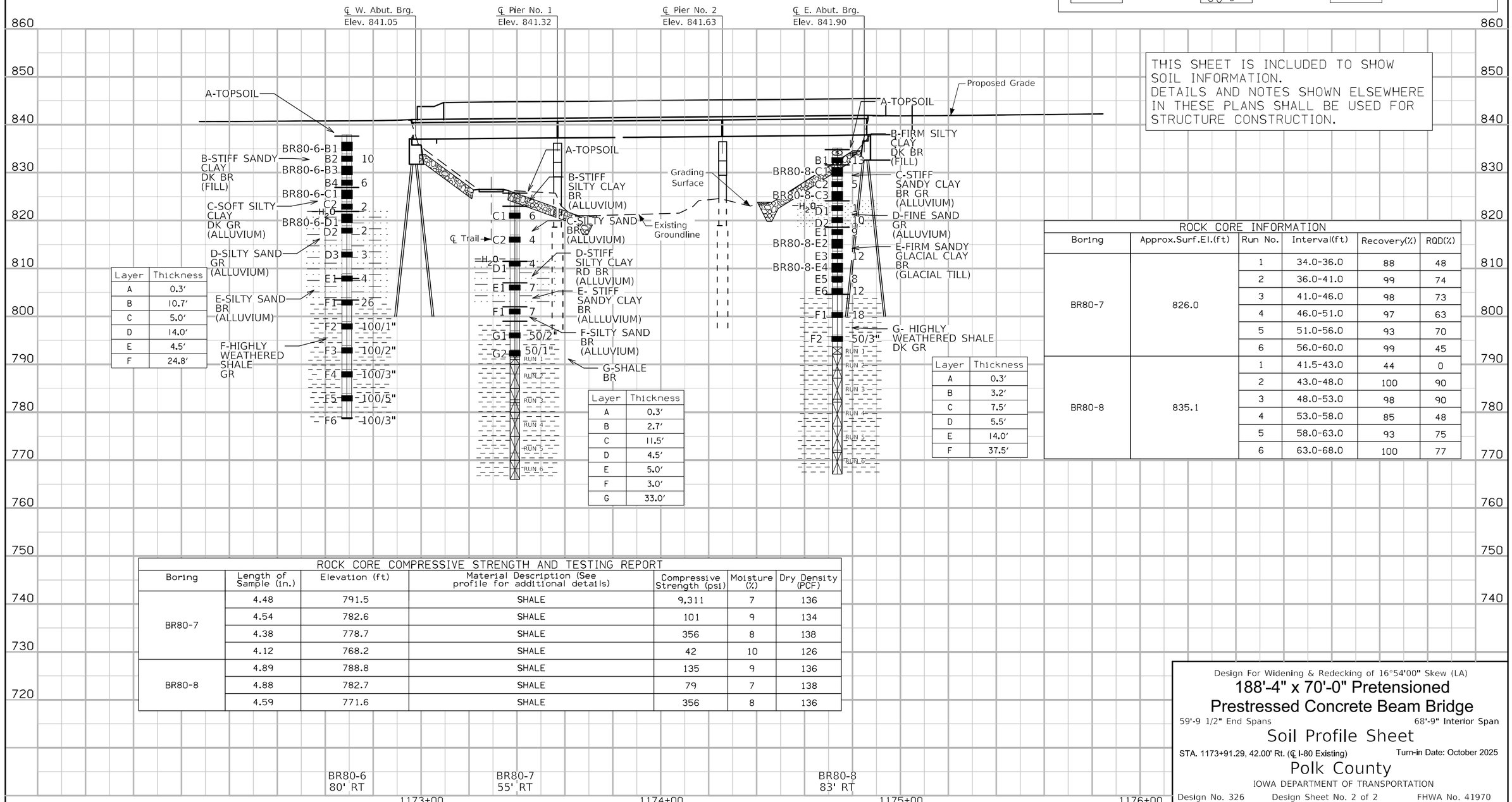

Layer	Thickness
A	0.3'
B	10.7'
C	5.0'
D	14.0'
E	4.5'
F	24.8'

Layer	Thickness
A	0.3'
B	2.7'
C	11.5'
D	4.5'
E	5.0'
F	3.0'
G	33.0'

Layer	Thickness
A	0.3'
B	3.2'
C	7.5'
D	5.5'
E	14.0'
F	37.5'

THIS SHEET IS INCLUDED TO SHOW SOIL INFORMATION.
DETAILS AND NOTES SHOWN ELSEWHERE IN THESE PLANS SHALL BE USED FOR STRUCTURE CONSTRUCTION.

ROCK CORE INFORMATION					
Boring	Approx.Surf.El.(ft)	Run No.	Interval(ft)	Recovery(%)	RQD(%)
BR80-7	826.0	1	34.0-36.0	88	48
		2	36.0-41.0	99	74
		3	41.0-46.0	98	73
		4	46.0-51.0	97	63
		5	51.0-56.0	93	70
		6	56.0-60.0	99	45
BR80-8	835.1	1	41.5-43.0	44	0
		2	43.0-48.0	100	90
		3	48.0-53.0	98	90
		4	53.0-58.0	85	48
		5	58.0-63.0	93	75
		6	63.0-68.0	100	77

ROCK CORE COMPRESSIVE STRENGTH AND TESTING REPORT						
Boring	Length of Sample (in.)	Elevation (ft)	Material Description (See profile for additional details)	Compressive Strength (psi)	Moisture (%)	Dry Density (PCF)
BR80-7	4.48	791.5	SHALE	9,311	7	136
	4.54	782.6	SHALE	101	9	134
	4.38	778.7	SHALE	356	8	138
	4.12	768.2	SHALE	42	10	126
BR80-8	4.89	788.8	SHALE	135	9	136
	4.88	782.7	SHALE	79	7	138
	4.59	771.6	SHALE	356	8	136

Design For Widening & Redecking of 16°54'00" Skew (LA)

188'-4" x 70'-0" Pretensioned Prestressed Concrete Beam Bridge

59'-9 1/2" End Spans 68'-9" Interior Span

Soil Profile Sheet

STA. 1173+91.29, 42.00' Rt. (℄ I-80 Existing) Turn-in Date: October 2025

Polk County

IOWA DEPARTMENT OF TRANSPORTATION

Design No. 326 Design Sheet No. 2 of 2 FHWA No. 41970

INDEX OF SHEETS

No.	DESCRIPTION
A Sheets	**Title Sheets**
A.3	Title Sheet
C Sheets	**Quantities and General Information**
C.1	Project Description
C.1	Estimated Project Quantities and Reference Notes
C.1	Standard Road Plans
C.1	Index of Tabulations
C.1	General Notes
C.2	Tabulations
J Sheets	**Traffic Control and Staging Sheets**
J.1	Traffic Control Plan
U Sheets	**500 Series, Mod.Stds. and Detail Sheets**
* U.1	Bridge Approach Detail
* U.2 - 9	Modified Standard Road Plans
	* Color Plan Sheets

IOWA ONE CALL
1-800-292-8989
www.iowaonecall.com
811 Know what's below. Call before you dig.

ROADWAY DESIGN

LICENSED PROFESSIONAL ENGINEER
BENETT J. BATENHORST
29926
IOWA

I hereby certify that this engineering document was prepared by me or under my direct personal supervision and that I am a duly licensed Professional Engineer under the laws of the State of Iowa.

Signature: Ben J. Batenhorst Date: 9-18-2025

Printed or Typed Name: Benett J. Batenhorst

My license renewal date is December 31, 2026

Pages or sheets covered by this seal: A.3, C.1-2, J.1, U.1-9

100-1D
10-18-05

PROJECT DESCRIPTION

The bridge is located on proposed I-80 Eastbound over Four Mile Creek Northeast of Des Moines.
The project involves constructing the bridge, both bridge appoaches, and longitudinal grooving.

100-0A
10-28-97

ESTIMATED ROADWAY QUANTITIES (1 DIVISION PROJECT)

Item No.	Item Code	Item	Unit	Total	As Built Qty.
1	2301-0690203	BRIDGE APPROACH, BR-203	SY	1266.9	
2	2412-0000100	LONGITUDINAL GROOVING IN CONCRETE, BRIDGE DECK	SY	2522	
3	2503-0500402	BRIDGE END DRAIN, DR-402	EACH	1	
4	2513-0001040	CONCRETE BARRIER, BA-104	LF	152.9	
5	2528-2518000	SAFETY CLOSURE	EACH	2	
6	2528-8445110	TRAFFIC CONTROL	LS	1	

100-4A
10-29-02

ESTIMATE REFERENCE INFORMATION

Item No.	Item Code	Description
1	2301-0690203	BRIDGE APPROACH, BR-203
		Refer to Tab. 112-6 in the C Sheets and U Sheets for Modified Details.
		Median shoulder bridge approach sections were modified for 44" single slope half barrier.
-	-	-
2	2412-0000100	LONGITUDINAL GROOVING IN CONCRETE, BRIDGE DECK
		Refer to Tab. 100-28 in the C Sheets.
-	-	-
3	2503-0500402	BRIDGE END DRAIN, DR-402
		Refer to Tab. 104-8A in the C Sheets and U Sheets for details and locaitons.
-	-	-
4	2513-0001040	CONCRETE BARRIER, BA-104
		Refer to Tab. 108-18B in the C Sheets and U Sheets for Modified Details.
		Barrier height and reinforcement was modified for a 44" single slope half barrier
		within reinforced bridge approach sections.
-	-	-
5	2528-2518000	SAFETY CLOSURE
		Refer to Tab. 108-13A in the C Sheets.
-	-	-
6	2528-8445110	TRAFFIC CONTROL
		Refer to Traffic Control Plan in the J Sheets.
-	-	-

111-25
10-18-11

INDEX OF TABULATIONS

Tabulation	Tabulation Title	Sheet No.
C Sheets		
100-0A	ESTIMATED ROADWAY QUANTITIES (1 DIVISION PROJECT)	C.1
100-1D	PROJECT DESCRIPTION	C.1
100-4A	ESTIMATE REFERENCE INFORMATION	C.1
100-28	LONGITUDINAL GROOVING	C.2
104-8A	SCOUR PROTECTION OR ROCK FLUME FOR BRIDGE END DRAIN	C.2
105-4	STANDARD ROAD PLANS	C.1
108-13A	SAFETY CLOSURES	C.2
108-18B	CONCRETE BARRIER AT SIDE LOCATIONS	C.2
111-25	INDEX OF TABULATIONS	C.1
112-6	BRIDGE APPROACH SECTION	C.2

105-4
10-18-11

STANDARD ROAD PLANS

The following Standard Road Plans apply to construction work on this project.

Number	Date	Title
DR-306	10-17-23	Precast Concrete Headwall for Subdrain Outlets
DR-402	04-16-24	Rock Flume for Bridge End Drain
LI-104	10-21-14	Junction box (Cast Iron)
PV-101	10-21-25	Joints
PV-102	10-21-25	PCC Curb Details
TC-1	10-15-19	Work Not Affecting Traffic (Two-Lane or Multi-Lane)

Note: This Bridge Plan is tied to the (85) Grade and New Plan. Refer to the Grade and New Plan for requirements and restrictions applicable to this plan, including the following:

-Traffic Control Plan
-Staging Notes
-Contractor Access
-Coordinated Operations
-Road Closure Details and Requirements
-Staging/Traffic Control Sheets
-Survey Sheets
-Pollution Prevention Plan
-Geometrics and Staking
-Plan and Profile
-Storm Sewer

100-28
10-19-10

LONGITUDINAL GROOVING

Location	Total SY	Remarks
W. Approach	562.2	
Bridge Deck	1400.7	
E. Approach	559.1	
Total:	2522.0	

104-8A
04-19-22

SCOUR PROTECTION OR ROCK FLUME FOR BRIDGE END DRAIN

Refer to Standard Road Plan DR-401 and DR-402

Location			Bid Items	Scour Protection (DR-401)			Rock Flume (DR-402)			
Bridge Station	Bridge Corner	Distance DI-1 or DI-2	Bridge End Drain	Special Ditch Control, Wood Excelsior Mat	Turf Reinforced Mat (TRM), Type 2	Transition Mat	Macadam Stone Base	Engineering Fabric	Erosion Stone	Remarks
				EC-101	EC-104	EC-105				
		FT	TYPE	SQ	SQ	SF	TONS	SY	TONS	
1173+91.29	SW	49.1	DR-402				1.560	64.2	42.250	
						Totals:	1.560	64.2	42.250	

108-13A
08-01-08

SAFETY CLOSURES

Refer to Section 2518 of the Standard Specifications

Station	Closure Type Road Qty.	Closure Type Hazard Qty.	Remarks
1172+00.00		1	West Approach
1176+00.00		1	East Approach
Total:		2	

112-6
04-18-17

BRIDGE APPROACH SECTION

Refer to the BR Series.

* Not a bid item

Location				Approach Pavement					Standard Road Plans BR Series			Subdrain								Remarks
Bridge Station	End	Skew Ahead Degrees LEFT	Skew Ahead Degrees RIGHT	(T) Thickness	Pay Length	Non-Reinf. Pavement Area	Single-Reinf. Pavement Area	Double-Reinf. Pavement Area	Approach	Fixed or Movable Abutment	Abutting Pavement	* Perforated Subdrain 4"	* Subdrain Outlet	* Subdrain Outlet Side	* Porous Backfill	* Class A Crushed Stone Backfill	* Modified Subbase	* Polymer Grid	* Special Backfill	
				Inches	FT	SY	SY	SY				LF	STA	Side	CY	CY	TON	SY	TON	
1173+91.29	West	16.9		12.0	77.0	254.1	166.6	219.1	BR-203 (MOD)	Movable	BR-211 (MOD)	100.0	1172+28.61	South	5.0		603.100	693.5		SEE NOTES (1), (2), and (3) Includes 39.5 Linear Feet and 5' Curb Runout of 4 Inch Sloped Curb
1173+91.29	East	16.9		12.0	75.8	250.5	164.2	212.4	BR-203 (MOD)	Movable	BR-211 (MOD)	100.0	1175+52.74	South	5.0		591.200	680.4		SEE NOTES (1), (2), and (3) Includes 22.7 Linear Feet and 5' Curb Runout of 4 Inch Sloped Curb
				Subtotals:		504.6	330.8	431.5												
				Totals:		1266.9						200.0			10.0		1194.300	1373.9		

Notes:
(1) Includes 48.7 SY (W End) and 45.1 SY (E End) of Non-Reinforced Section w/Barrier. Refer to Sheet U.6 for Modified BR-203 details
(2) Includes 29.7 SY (W End) and 27.3 SY (E End) of Single Reinforced Section w/Barrier. Refer to Sheet U.7 for Modified BR-203 details
(3) Includes 48.2 SY (W End) and 21.6 SY (E End) of Double Reinforced Section w/Barrier. Refer to Sheet U.8 for Modified BR-203 details

108-18B
MODIFIED

CONCRETE BARRIER AT SIDE LOCATIONS

Refer to BA-102, BA-103, BA-104, BA-105, BA-106, BA-107, and BA-150.

(1) Lane(s) to which the installation is adjacent.
(2) Refer to the Bridge Approach tabulation (112-6) for quantities.
* Bid Item

Location						Side Barrier					Remarks	Expansion Joints		
No.	(1) Direction of Traffic	Station to Station		Side	(L2) Offset	Barrier Type (BA-102, BA-103, or BA-104)	(L) Length of Barrier*	BA-105 Transition Section*	BA-107 End Section*	Reinforced Paved (2) Shoulder (Required?)		Station	Side	Remarks
					FT		LF	No.	No.	Yes/No				
1	EB	1172+18.61	1173+05.97	LT	13.8-10.0	MOD BA-104	87.4			YES		1172+28.61	LT	
2	EB	1174+97.26	1175+62.74	LT	10.0-12.7	MOD BA-104	65.5			YES		1175+52.74	LT	
						Total:	152.9							

108-23A
08-01-08

TRAFFIC CONTROL PLAN

Refer to IM-NHS-080-4(085)138--03-77 Grading and New Plan for the Traffic Control Plan.

Traffic Control Notes:

The following projects are tied:

IM-NHS-080-4(085)138--03-77 Grade and New
IM-NHS-080-4(87)139--03-77 Bridge Design No. 226
IM-NHS-080-4(88)139--03-77 Bridge Design No. 326

The Project Traffic Control Plan and Staging Notes are included in the (085) Grade and New Plan and will involve all traffic control as detailed in the Traffic Control Plan, Staging Notes and traffic control sheets.
Traffic Control responsibilities may be delegated between projects. Each Contractor will be responsible for complying with all the requirements outlined in the Traffic Control Plan, and coordinating activities to insure compliance.

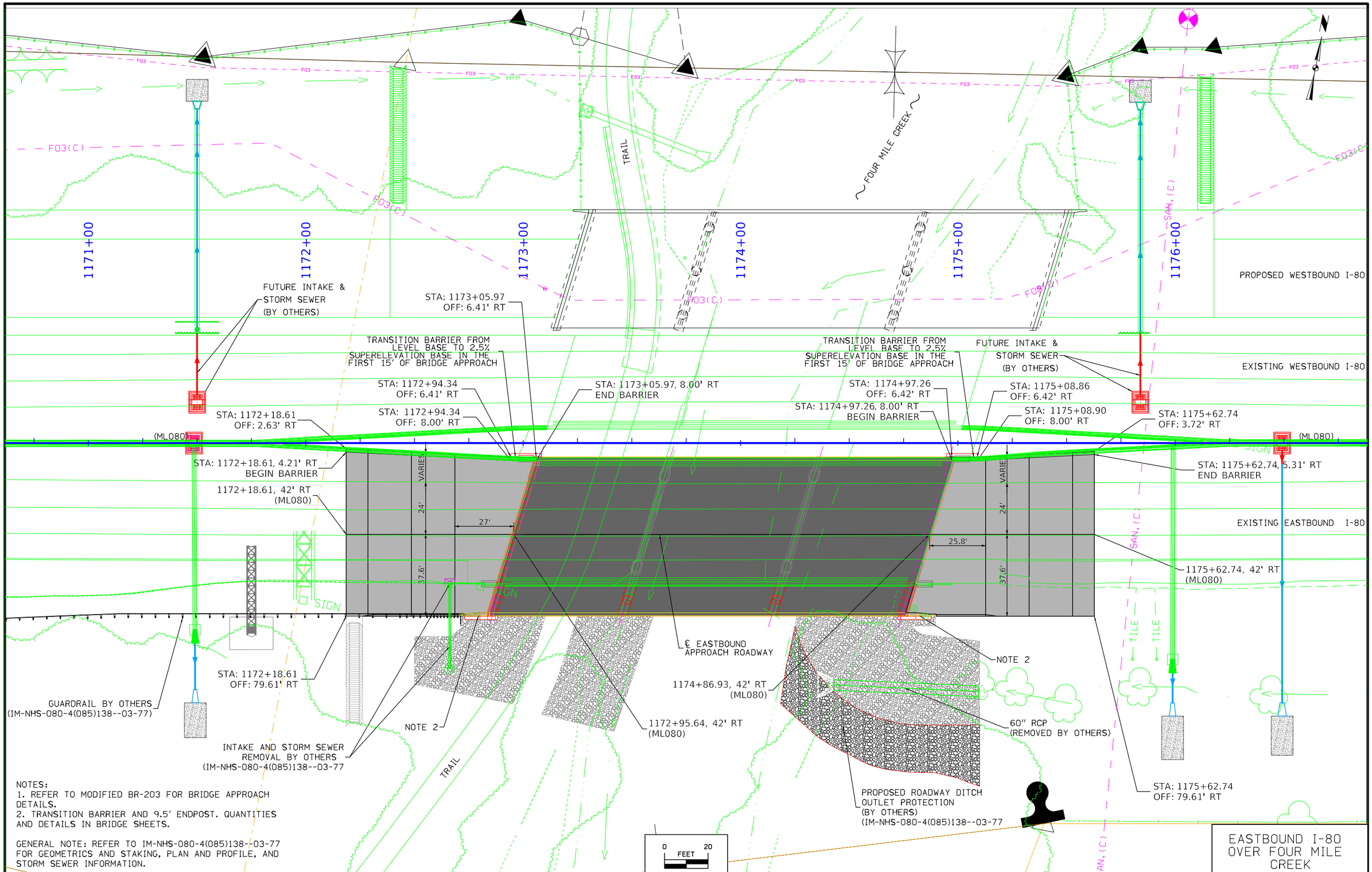

NOTES:
1. REFER TO MODIFIED BR-203 FOR BRIDGE APPROACH DETAILS.
2. TRANSITION BARRIER AND 9.5' ENDPOST. QUANTITIES AND DETAILS IN BRIDGE SHEETS.

GENERAL NOTE: REFER TO IM-NHS-080-4(085)138--03-77 FOR GEOMETRICS AND STAKING, PLAN AND PROFILE, AND STORM SEWER INFORMATION.

EASTBOUND I-80 OVER FOUR MILE CREEK

FILE NO. 32061	ENGLISH	DESIGN TEAM Iowa DOT \ HDR	POLK COUNTY	PROJECT NUMBER IM-NHS-080-4(88)139--03-77	SHEET NUMBER U.1

2:56:59 PM 9/16/2025 MCRUZESCOB pw:\\pwhdruscen01:HDR_US_Central_01\Documents\IADOT\IDOT-NEMM_Stage_5_Final_Rdwy\6.0_CAD_BIM\6.2_WIP\Workset\Dgn\Design\CADD_Files\(88)_EB_over_Four_Mile_Creek\EB I-80 Bridge Approaches ove 4 Mile Creek

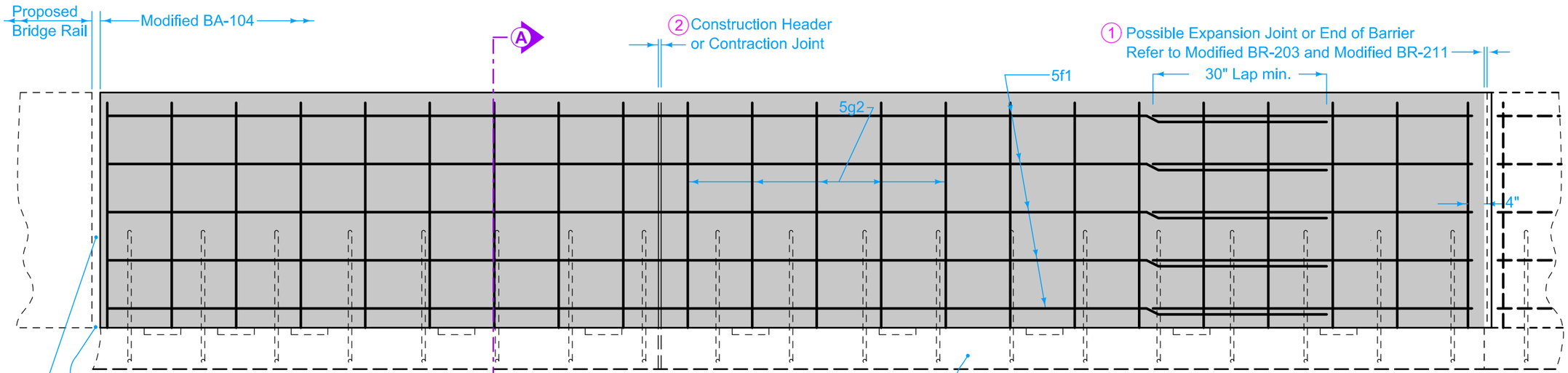

ELEVATION

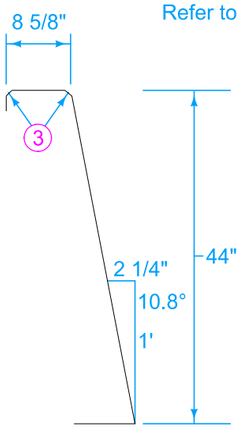

BARRIER FACE

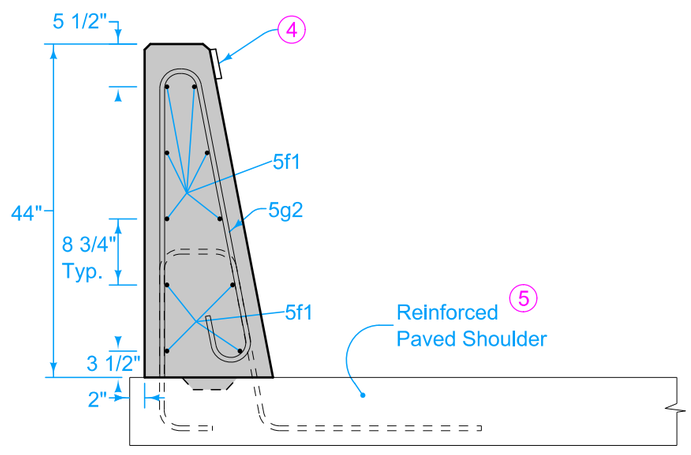

SECTION A-A

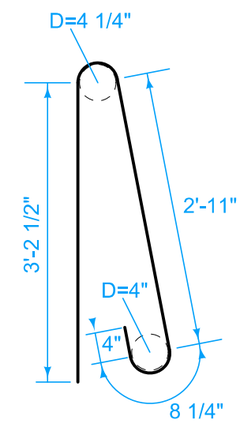

5g2
BENT BAR

Use Grade 60 epoxy-coated reinforcing bars. Provide 2 inches minimum cover. Anchor all reinforcement to prevent movement. Secure each section at the front, back, and at 3'-6" intervals using a method approved by the Engineer.

1. Expansion joints are necessary only where specifically required by project plans. Conform expansion material to the shape of the barrier. No sealer is required.
2. Where abutting sections are placed as separate pours, a butt joint may be used. Extend longitudinal reinforcement into the abutting section a minimum of 3 feet. Contraction joint locations shall match pavement joint locations.
3. Fillet all exposed corners with a $\frac{3}{4}$ inch dressed and beveled strip.
4. Place barrier markers at 100 foot increments in areas with non-continuous lighting, or 250 foot increments in areas with continuous lighting. Marker color to be the same as adjacent edge line.
5. Refer to Mod BR-203 for details of 5g3 bars and reinforced paved shoulder.

Contract Item:
Concrete Barrier, BA-104 Modified
Tabulation:
108-18B

CONCRETE QUANTITIES
Per foot
0.15 cy

REINFORCING BAR LIST
Per Section (Approx. 20 feet)

Bar	Size	Number of Bars	Length	Weight (lbs.)	Spacing
5g2	5	20	7'-10"	147	12"
5f1	5	10	20'	255	—
Lap	5	10	2'-6"	4	—

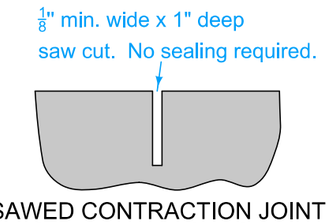

SAWED CONTRACTION JOINT
Saw cut top and front face.
Saw cut back if exposed.

MODIFIED STANDARD ROAD PLAN

REVISION	
2	10-18-22

BA-104

SHEET 1 of 1

MODIFICATIONS: Changed from 34" to 44" barrier height along with reinforcing.

APPROVED BY DESIGN METHODS ENGINEER

44" CONCRETE BARRIER FOR USE WITH REINFORCED PAVED SHOULDER

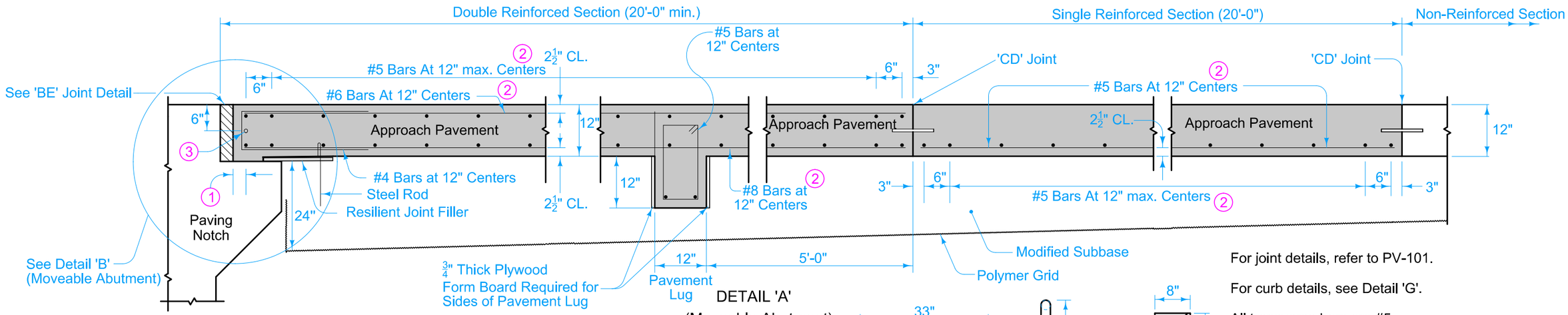

DETAIL 'A'
(Moveable Abutment)

For joint details, refer to PV-101.

For curb details, see Detail 'G'.

All transverse bars are #5.

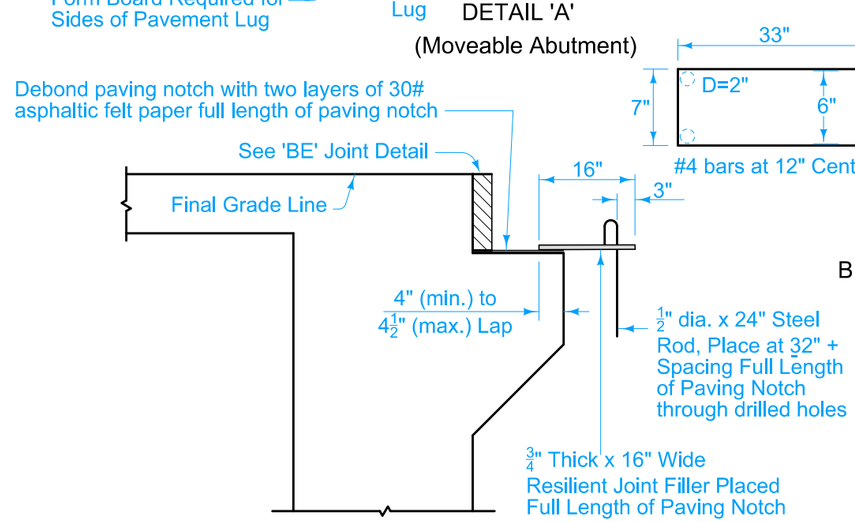

DETAIL 'B' (Moveable Abutment)

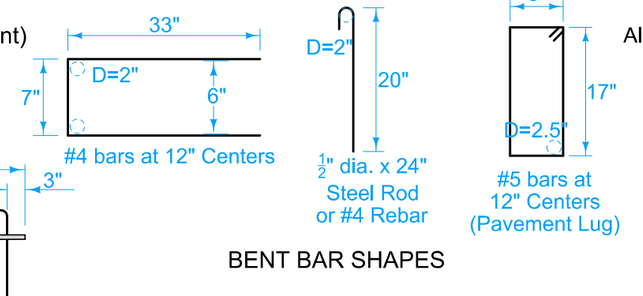

BENT BAR SHAPES

1. 2" min. to 2 1/2" max. clear to bent bar.
2. Minimum lap length: #5 Bars - 18"
   #6 Bars - 27"
   #8 Bars - 48"
3. If bridge is skewed, place additional #5 bar parallel to skewed face.

Contract Item:
Bridge Approach, BR-203 Modified
Longitudinal Grooving in Concrete, Bridge Deck

Tabulation:
112-6

MODIFIED STANDARD ROAD PLAN	REVISION 4 10-15-24 BR-203 SHEET 1 of 6

MODIFICATIONS: Added details for barrier within bridge approach section.

APPROVED BY DESIGN METHODS ENGINEER

DOUBLE REINFORCED 12" APPROACH

FILE NO. 32061	ENGLISH	DESIGN TEAM Iowa DOT \ HDR	POLK COUNTY	PROJECT NUMBER IM-NHS-080-4(88)139--03-77	SHEET NUMBER U.3

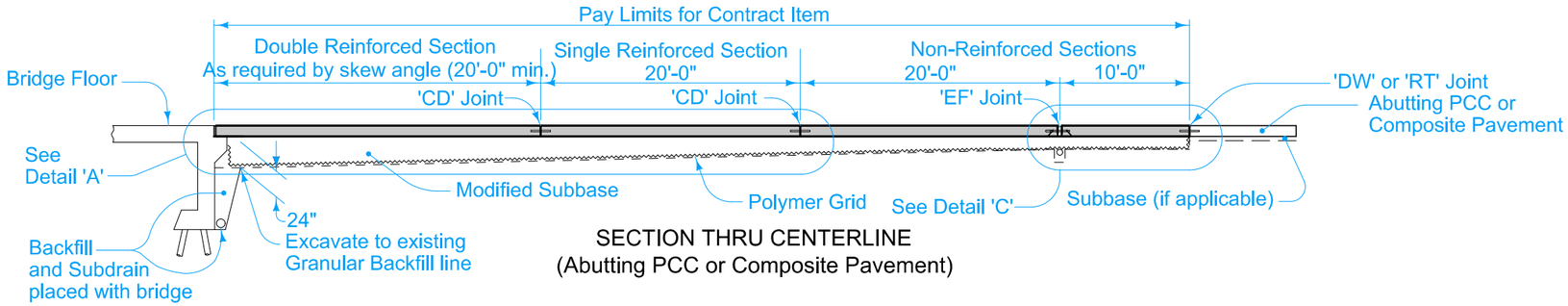

SECTION THRU CENTERLINE
(Abutting PCC or Composite Pavement)

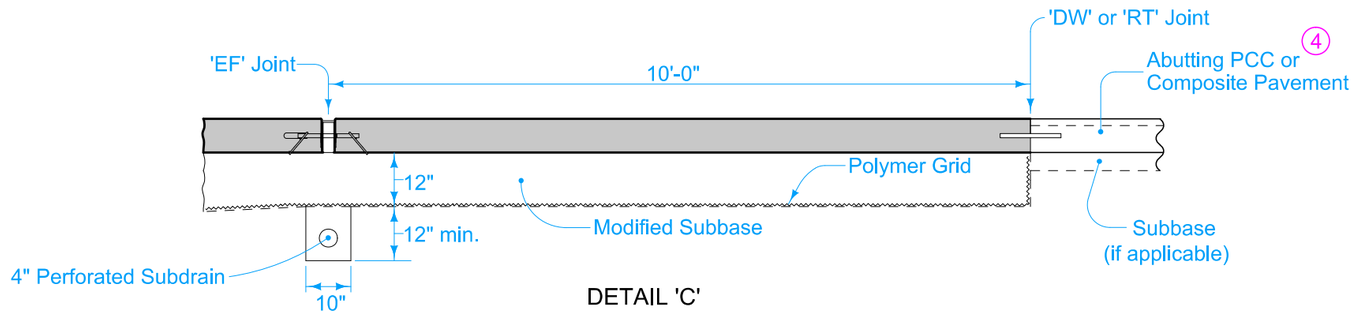

DETAIL 'C'
(Doweled PCC Pavement)

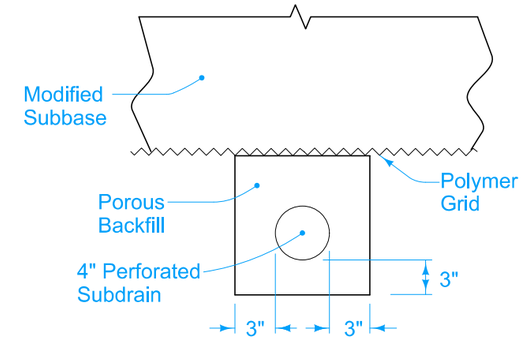

4" SUBDRAIN LOCATION

4 If abutting pavement (PCC or HMA) is not in place, refer to BR-213.

MODIFIED	REVISION	
	4	10-15-24
STANDARD ROAD PLAN	BR-203	
	SHEET 2 of 6	

MODIFICATIONS: Added details for barrier within bridge approach section.

APPROVED BY DESIGN METHODS ENGINEER

DOUBLE REINFORCED 12" APPROACH

FILE NO. 32061	ENGLISH	DESIGN TEAM Iowa DOT \ HDR	POLK COUNTY	PROJECT NUMBER IM-NHS-080-4(88)139--03-77	SHEET NUMBER U.4

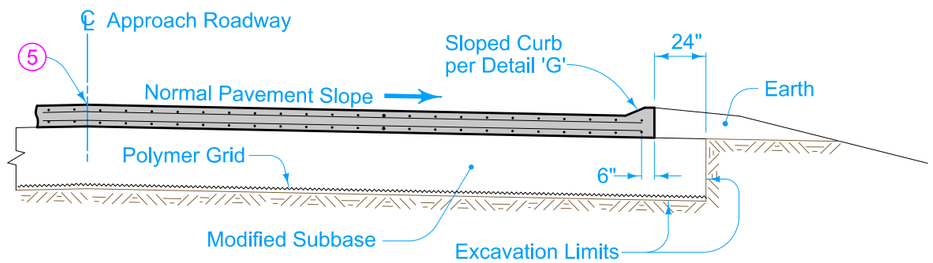

SECTION A-A 6

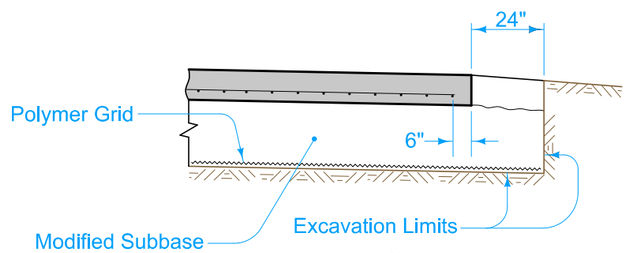

SECTION B-B 6

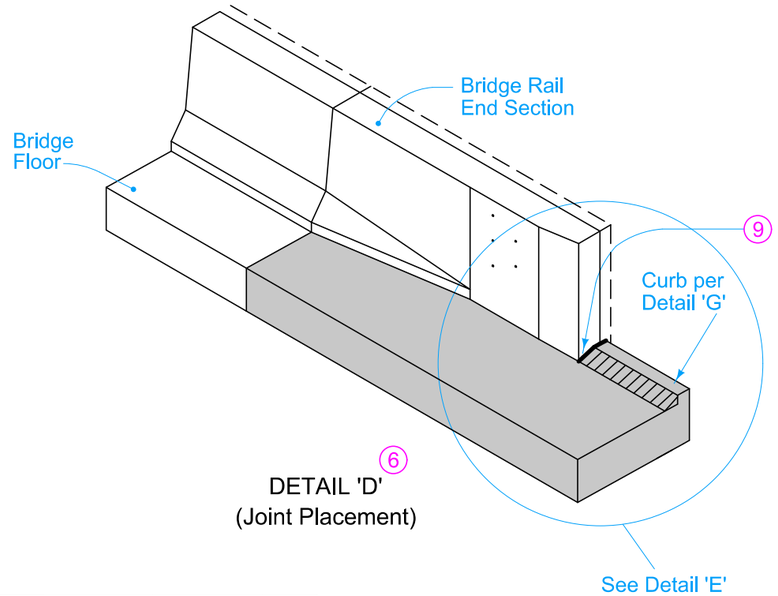

DETAIL 'D' 6
(Joint Placement)

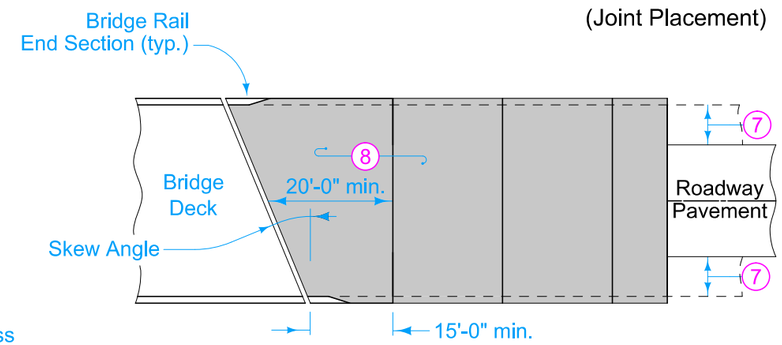

APPROACH PAVEMENT
LAYOUT AT A SKEW

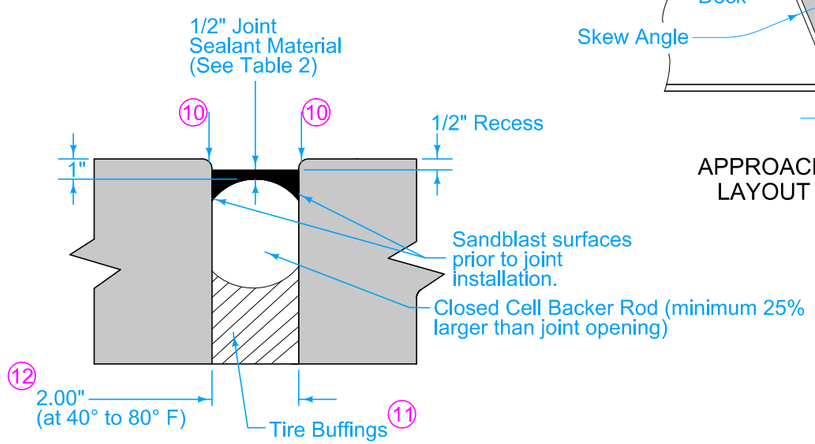

'BE'JOINT
DETAIL

Table 2
Approved List of Sealant
Dow - Dowsil 902 RCS
Sika - Sikasil 728 RCS
Watson Bowman Acme - Wabo SiliconeSeal
Pecora - 322FC

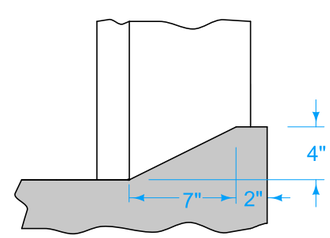

DETAIL 'G'

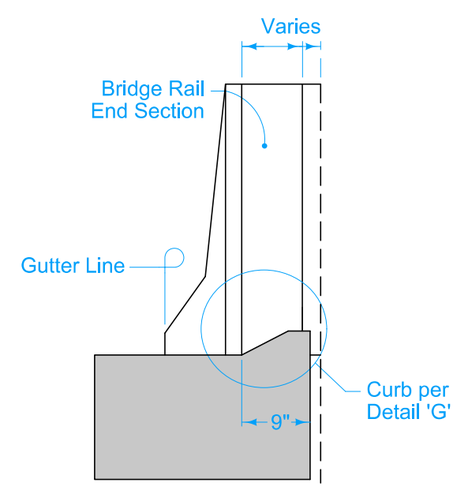

DETAIL 'E'
(Back of Curb Placement)

5 Longitudinal Joint (PV-101):
Single pour - Saw cut joint per Detail B.
Two pours - Use 'KS-2' Joint.

6 Refer to Modified BR-211.

7 Design shoulder width.

8 Reinforced bridge approach section.

9 Joint at end of Bridge Rail End Section: Place joint filler between Bridge Rail End Section and areas with curb. Shape material to fit the shape of the curb per Section B-B of PV-101. Seal joint per Detail F of PV-101.

- Moveable Abutment Bridges: Flexible Foam Expansion Joint Filler complying with Section 4136 of the Standard Specifications.
Set width of gap to 2 inches. Joint length as required to completely fill from back side of curb to front face of bridge wing.
Set width of gap to 2 inches. Joint length as required to completely fill from back side of roadway barrier to face of bridge barrier.

10 Edge with ¼ inch tool for length of joint indicated if formed edging not required when cut with diamond blade saw.

11 Compact tire buffings by spading with a square-nose shovel. Tire buffings shall not be larger than ½ inch.

12 Setting Width Notes:

- Width is perpendicular to abutment.

- Temperature of concrete deck on the underside or shaded portion of the deck shall be between 40 to 80 degrees Farenheit when placing approach slab concrete.

-This 'BE' joint and the setting temperatures may be used for all concrete beam or slab bridges up to 575' in length and for all steel girder bridges up to 400' in length.

MODIFIED
STANDARD ROAD PLAN

REVISION 4 10-15-24

BR-203

SHEET 3 of 6

MODIFICATIONS: Added details for barrier within bridge approach section.

APPROVED BY DESIGN METHODS ENGINEER

DOUBLE REINFORCED 12" APPROACH

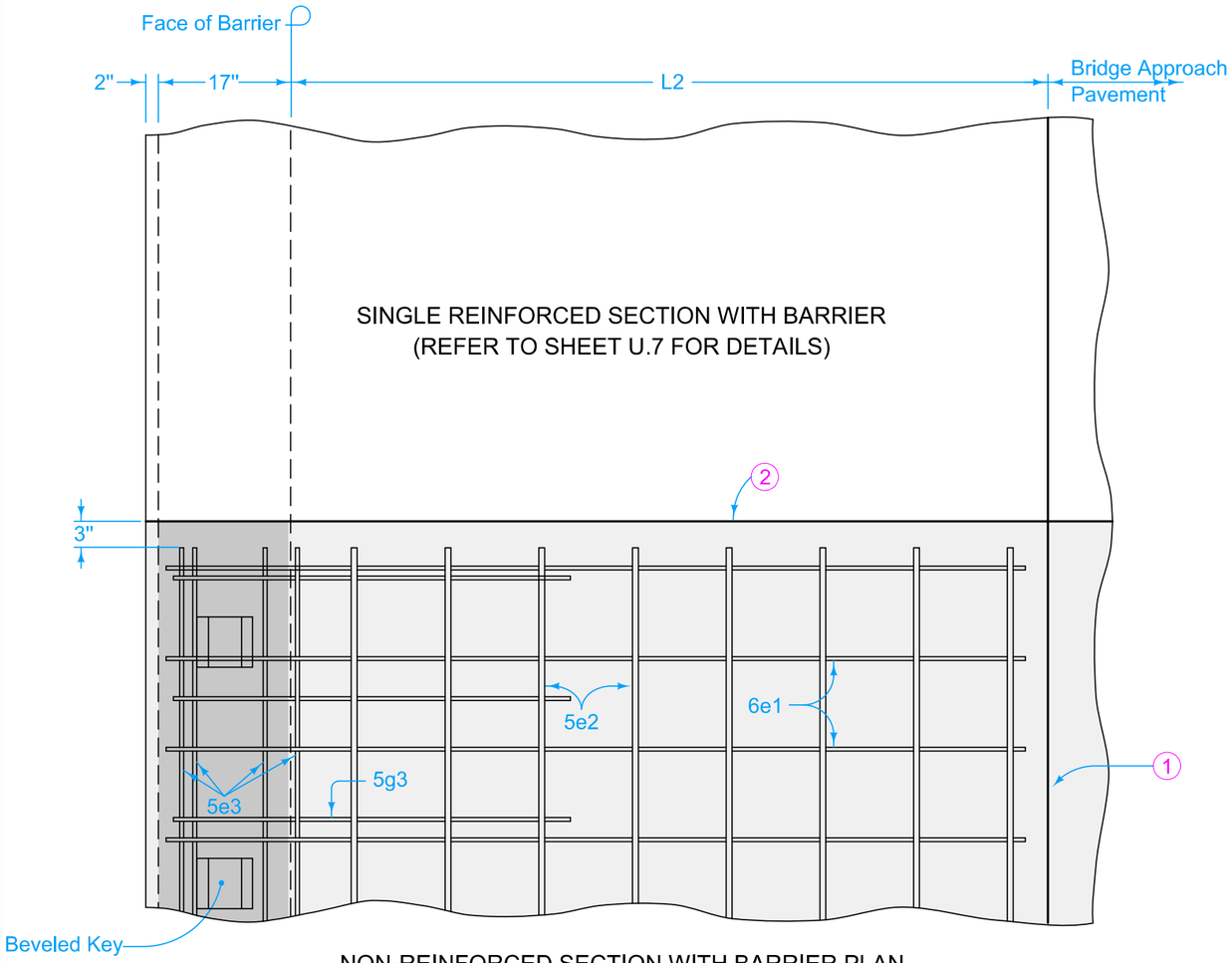

NON-REINFORCED SECTION WITH BARRIER PLAN

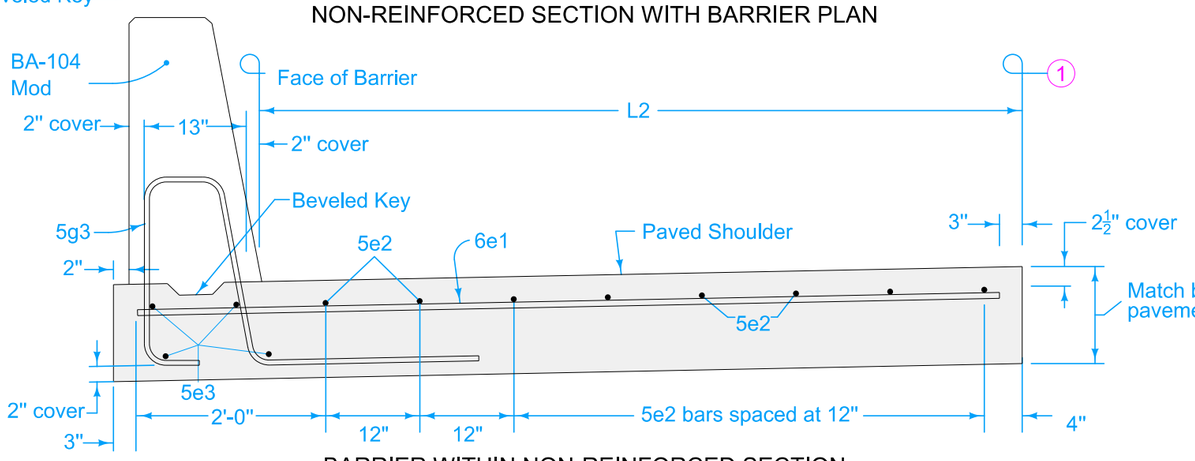

BARRIER WITHIN NON-REINFORCED SECTION

REINFORCING BAR LIST Per Shoulder Panel (Approximately 17 Linear Feet)				
L2	Bar	Number of Bars	Length	Spacing
10'	6e1	15	11'-1"	12"
	5e2	4	16'-6"	12"
12'	6e1	15	13'-1"	12"
	5e2	6	16'-6"	12"
14'	6e1	15	15'-1"	12"
	5e2	8	16'-6"	12"
16'	6e1	15	17'-1"	12"
	5e2	10	16'-6"	12"
18'	6e1	15	19'-1"	12"
	5e2	12	16'-6"	12"
Applies to all Shoulder Widths	5e3	4	16'-6"	See Drawing
	5g3	varies	8'-0"	3

1. Longitudinal jointing per Modified BR-211.
2. Transverse jointing per Modified BR-211.
3. Match spacing of vertical bars in concrete barrier.

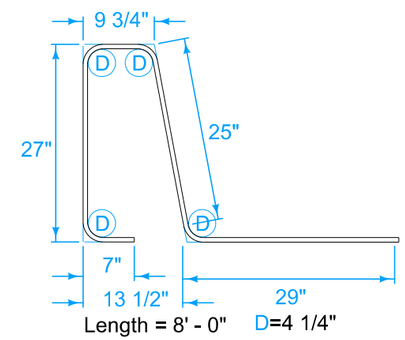

5g3

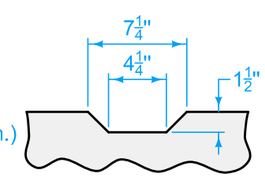

BEVELED KEY

Use 2 x 8 lumber 8" long to make keys.
Place keys at 2'-8" centers.

MODIFIED STANDARD ROAD PLAN

REVISION	
4	10-15-24

BR-203

SHEET 4 of 6

MODIFICATIONS: Added details for barrier within bridge approach section.

APPROVED BY DESIGN METHODS ENGINEER

DOUBLE REINFORCED 12" APPROACH

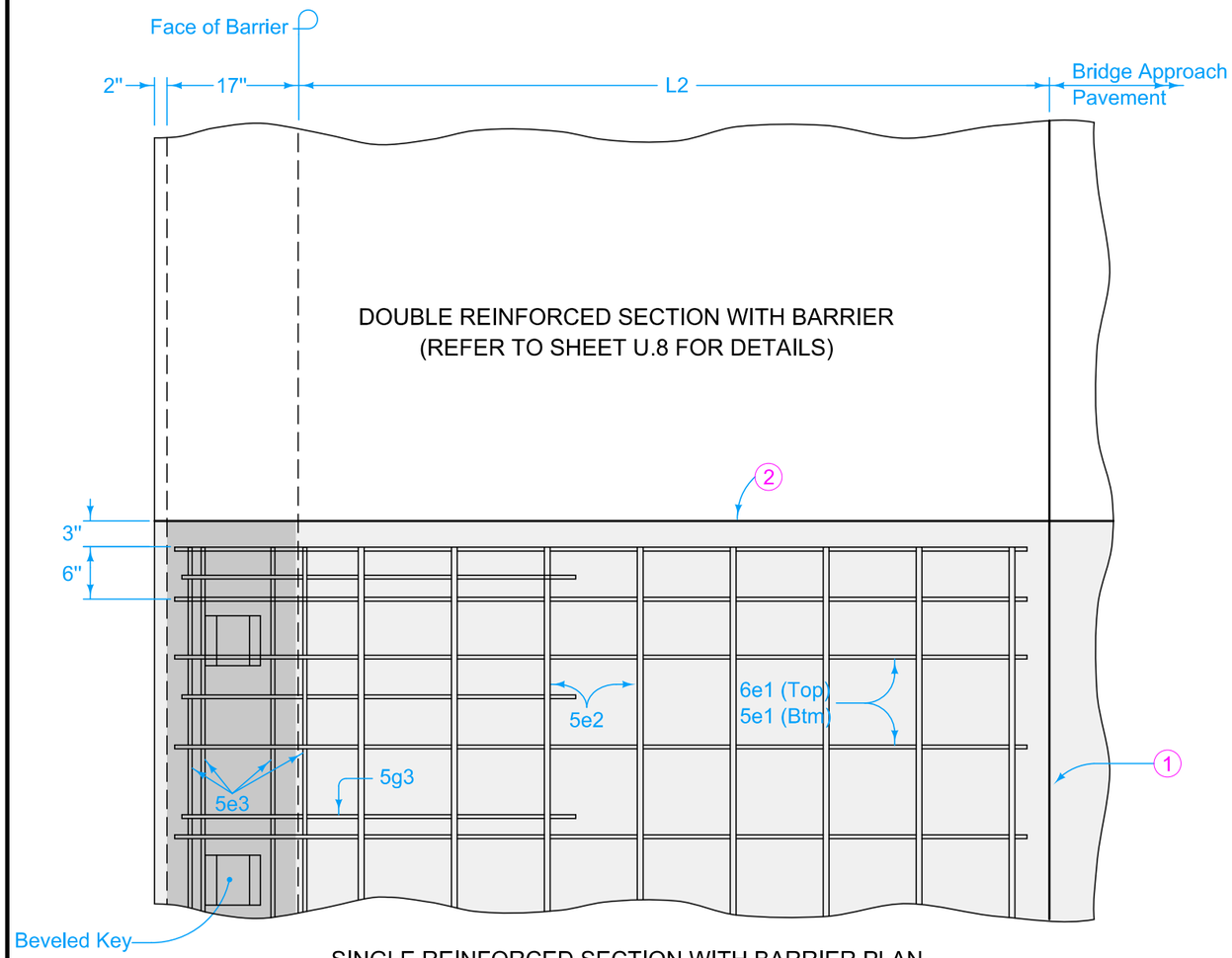

SINGLE REINFORCED SECTION WITH BARRIER PLAN

REINFORCING BAR LIST Per Shoulder Panel (Approximately 17 Linear Feet)				
L2	Bar	Number of Bars	Length	Spacing
10'	5e1	19	11'-1"	12"
	5e2	8	16'-6"	12"
	6e1	19	11'-1"	12"
12'	5e1	19	13'-1"	12"
	5e2	12	16'-6"	12"
	6e1	19	13'-1"	12"
14'	5e1	19	15'-1"	12"
	5e2	16	16'-6"	12"
	6e1	19	15'-1"	12"
16'	5e1	19	17'-1"	12"
	5e2	20	16'-6"	12"
	6e1	19	17'-1"	12"
18'	5e1	19	19'-1"	12"
	5e2	24	16'-6"	12"
	6e1	19	19'-1"	12"
Applies to all Shoulder Widths	5e3	4	16'-6"	See Drawing
	5g3	varies	8'-0"	3

1. Longitudinal jointing per Modified BR-211.
2. Transverse jointing per Modified BR-211.
3. Match spacing of vertical bars in concrete barrier.

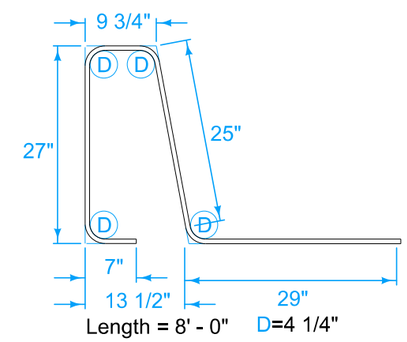

5g3

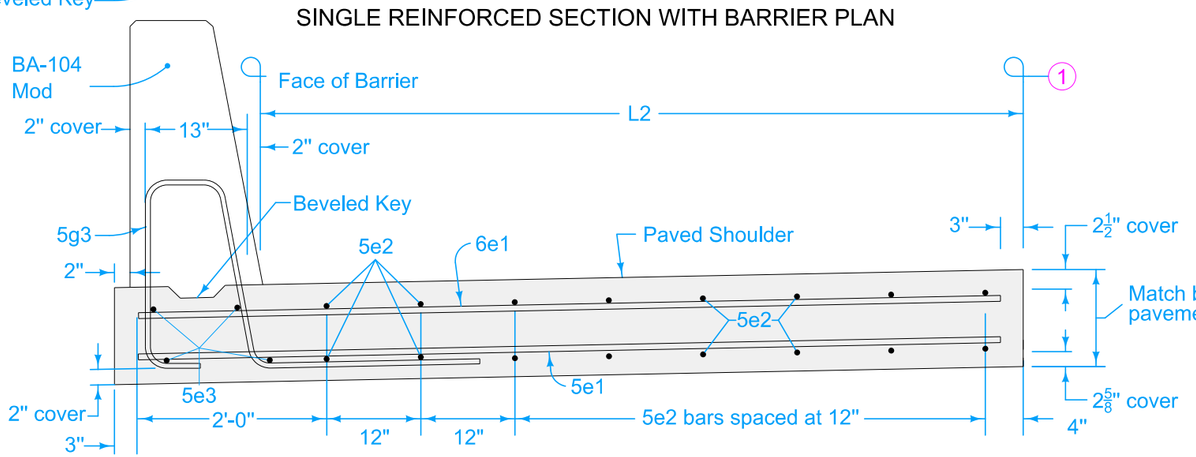

BARRIER WITHIN SINGLE REINFORCED SECTION

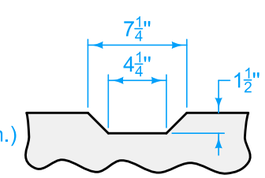

BEVELED KEY

Use 2 x 8 lumber 8" long to make keys.
Place keys at 2'-8" centers.

MODIFIED STANDARD ROAD PLAN

REVISION	
4	10-15-24

BR-203

SHEET 5 of 6

MODIFICATIONS: Added details for barrier within bridge approach section.

APPROVED BY DESIGN METHODS ENGINEER

DOUBLE REINFORCED 12" APPROACH

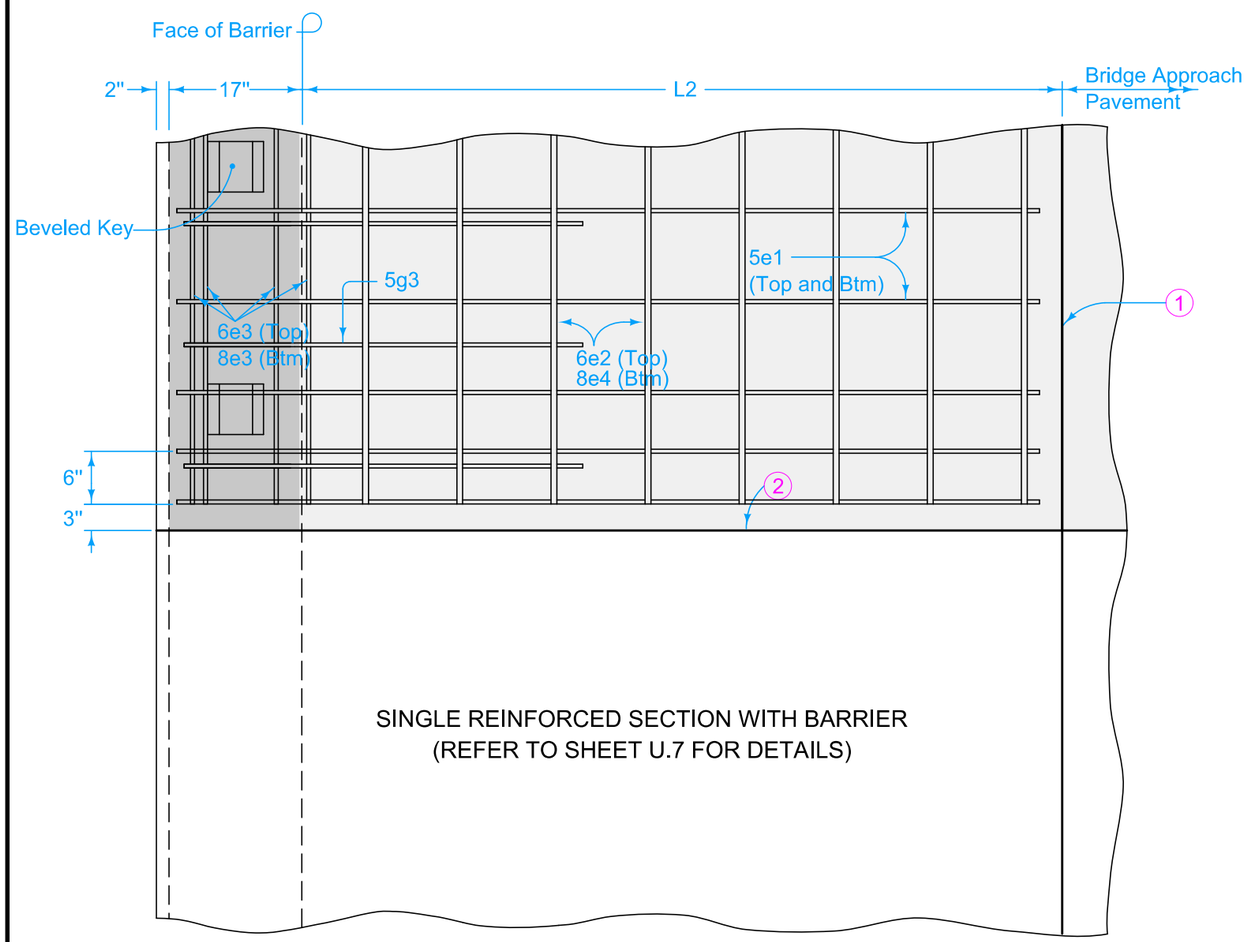

PLAN

REINFORCING BAR LIST Per Shoulder Panel (Approximately 17 Linear Feet)				
L2	Bar	Number of Bars	Length	Spacing
10'	6e1	38	11'-1"	12"
	6e2	4	16'-6"	12"
	8e4	4	16'-6"	12"
12'	6e1	38	13'-1"	12"
	6e2	6	16'-6"	12"
	8e4	6	16'-6"	12"
14'	6e1	38	15'-1"	12"
	6e2	8	16'-6"	12"
	8e4	8	16'-6"	12"
16'	6e1	38	17'-1"	12"
	6e2	10	16'-6"	12"
	8e4	10	16'-6"	12"
18'	6e1	38	19'-1"	12"
	6e2	12	16'-6"	12"
	8e4	12	16'-6"	12"
Applies to all Shoulder Widths	6e3	2	16'-6"	See Drawing
	8e3	2	16'-6"	See Drawing
	5g3	varies	8'-0"	3

1. Longitudinal jointing per Modified BR-211.
2. Transverse jointing per Modified BR-211.
3. Match spacing of vertical bars in concrete barrier.

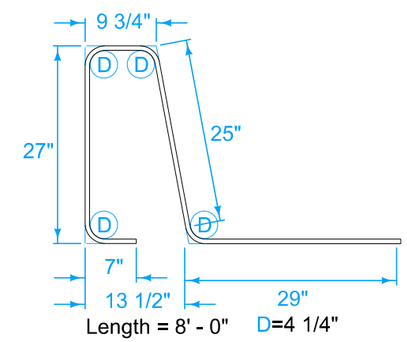

5g3

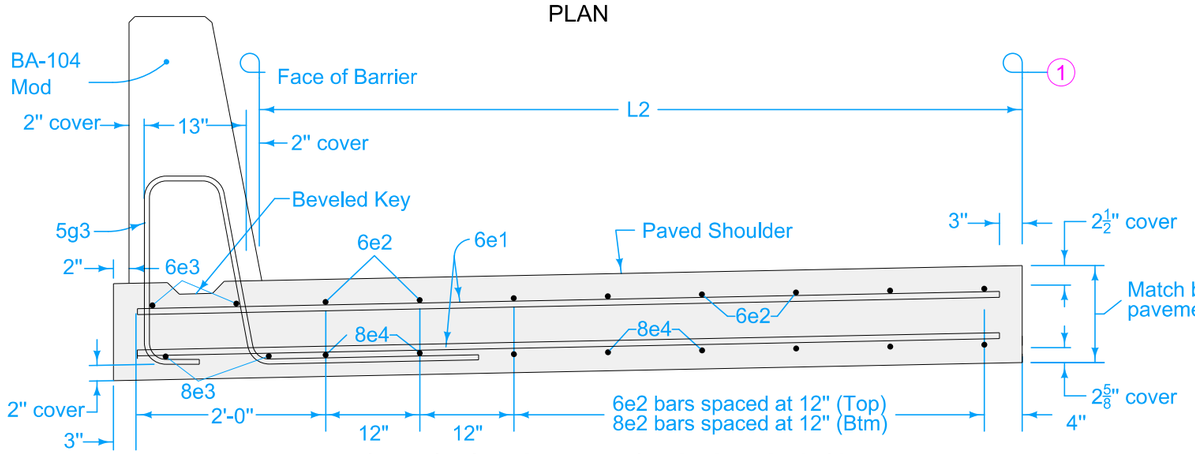

BARRIER WITHIN DOUBLE REINFORCED SECTION

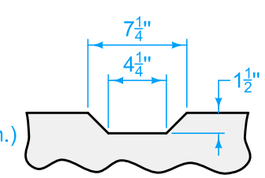

BEVELED KEY

Use 2 x 8 lumber 8" long to make keys.
Place keys at 2'-8" centers.

MODIFIED STANDARD ROAD PLAN

REVISION	
4	10-15-24

BR-203

SHEET 6 of 6

MODIFICATIONS: Added details for barrier within bridge approach section.

APPROVED BY DESIGN METHODS ENGINEER

DOUBLE REINFORCED 12" APPROACH

For joint details, see PV-101.

1. Build 4 inch Sloped Curb to end of Double Reinforced Section. Refer to PV-102 for curb and runout details.
2. See Mod BR-203.
3. Longitudinal Joint (PV-101):
   Single Pour - Saw cut joint per Detail B .
   Two Pours - Use 'KS-1' joint (Single Reinforced Section).
   Use 'KS-2' joint (Double Reinforced Section).
4. Polymer Grid and excavation limits of Modified Subbase 2 feet outside of pavement edge. See Mod BR-203.
5. Slope subdrain to drain.
6. Place an "X" in the plastic concrete near the 'EF' joint at the outside edge of pavement.
7. See Sheet U.1 for barrier layout details. See Mod BA-104 and Mod BR-203 for barrier dimensions and reinforcing details.

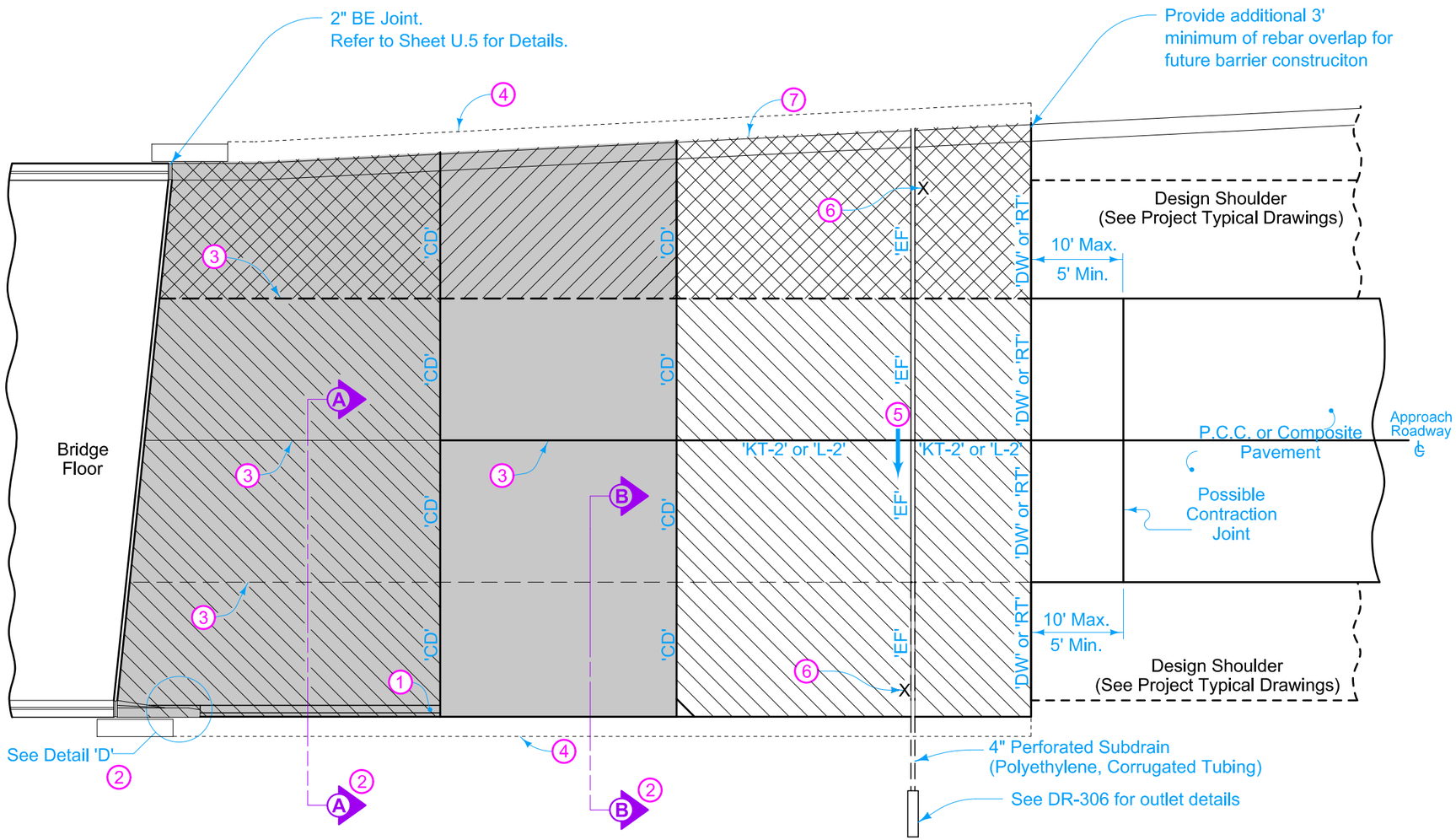

PLAN VIEW

Pay limits for contract item include the following areas:

- Double Reinforced Section
- Double Reinforced Section w/ Barrier (See Mod BR-203 on Sheet U.8)
- Single Reinforced Section
- Single Reinforced Section w/ Barrier (See Mod BR-203 on Sheet U.7)
- Non-Reinforced Section
- Non-Reinforced Section w/ Barrier (See Mod BR-203 on Sheet U.6)

MODIFIED STANDARD ROAD PLAN

REVISION 3 10-18-22

BR-211

SHEET 1 of 1

MODIFICATIONS: Revised bridge approach to include flared section with barrier.

APPROVED BY DESIGN METHODS ENGINEER

BRIDGE APPROACH (ABUTTING PCC OR COMPOSITE PAVEMENT)