PCC Pavement - Replace
NHSX-063-3(108)--3H-62
Mahaska COUNTY

LETTING DATE
July 21, 2026

INDEX OF SHEETS

No.	DESCRIPTION
A Sheets	**Title Sheets**
A.1	Title Sheet
A.2	Location Map Sheet
B Sheets	**Typical Cross Sections and Details**
B.1 - 5	Typical Cross Sections and Details
C Sheets	**Quantities and General Information**
C.1 - 4	Estimated Project Quantities and Reference Information
C.5	Standard Road Plans
C.6 - 27	Tabulations
CS Sheets	**Soils Tabulations**
CS.1 - 2	Soils Tabulations
D Sheets	**Mainline Plan and Profile Sheets**
D.1	Plan & Profile Legend & Symbol Information Sheet
D.2 - 3	US 63
G Sheets	**Survey Sheets**
G.1 - 2	Reference Ties and Bench Marks
G.3	Horizontal Control Tab. & Super for all Alignments
J Sheets	**Traffic Control and Staging Sheets**
J.1	Traffic Control Plan
J.2	511 Travel Restrictions
J.3	Staging Notes
J.4 - 12	Staging Plans
R Sheets	**Erosion Control Sheets**
RC.1	Signature Page
RC.2	Estimated Project Quantities and Reference Information
RC.3 - 5	Tabulations
RC.6 - 7	Pollution Prevention Plan
RR.1	Legend and Symbol Information Sheet
RR.2 - 6	Erosion Control Plans
U Sheets	**500 Series, Mod.Stds. and Detail Sheets**
U.1 - 8	Modified Standards and Detail Sheets

IOWA | DOT

PLANS OF PROPOSED IMPROVEMENT ON THE

PRIMARY ROAD SYSTEM
Mahaska COUNTY
PCC Pavement - Replace
N of Co Rd G63 to
S of 293rd St - Various Locations

SCALES: As Noted

Refer to the Proposal Form for list of applicable specifications.

Value Engineering Saves. Refer to Article 1105.14 of the Specifications.

IOWA ONE CALL
1-800-292-8989
www.iowaonecall.com
811 Know what's below. Call before you dig.

REVISIONS

	TOTAL
	75
PROJECT IDENTIFICATION NUMBER	
25-62-063-010	
PROJECT NUMBER	
NHSX-063-3(108)--3H-62	
R.O.W. PROJECT NUMBER	

INDEX OF SEALS

SHEET NO.	NAME	TYPE	BID QUANTITY SHEETS
A.1	Ryan R. Miller	Primary Signature Block	C.1-4
CS.1	Mark A. Dell	Geotechnical Design	C.1-4
RC.1	Rachel A. Harris	Landscape Design	RC.2

ROADWAY DESIGN

LICENSED PROFESSIONAL ENGINEER Ryan R. Miller 18421 IOWA

I hereby certify that this engineering document was prepared by me or under my direct personal supervision and that I am a duly licensed Professional Engineer under the laws of the State of Iowa.

Signature: Ryan R. Miller Date: 05-05-2026
Ryan R. Miller
Printed or Typed Name

My license renewal date is December 31, 2026

Pages or sheets covered by this seal: A.1-2, B.1-5, C.1-27, D.1-3, G.1-3, J.1-12, U.1-8

END CONSTRUCTION
M.P. 58.93
Sta. 1355+00

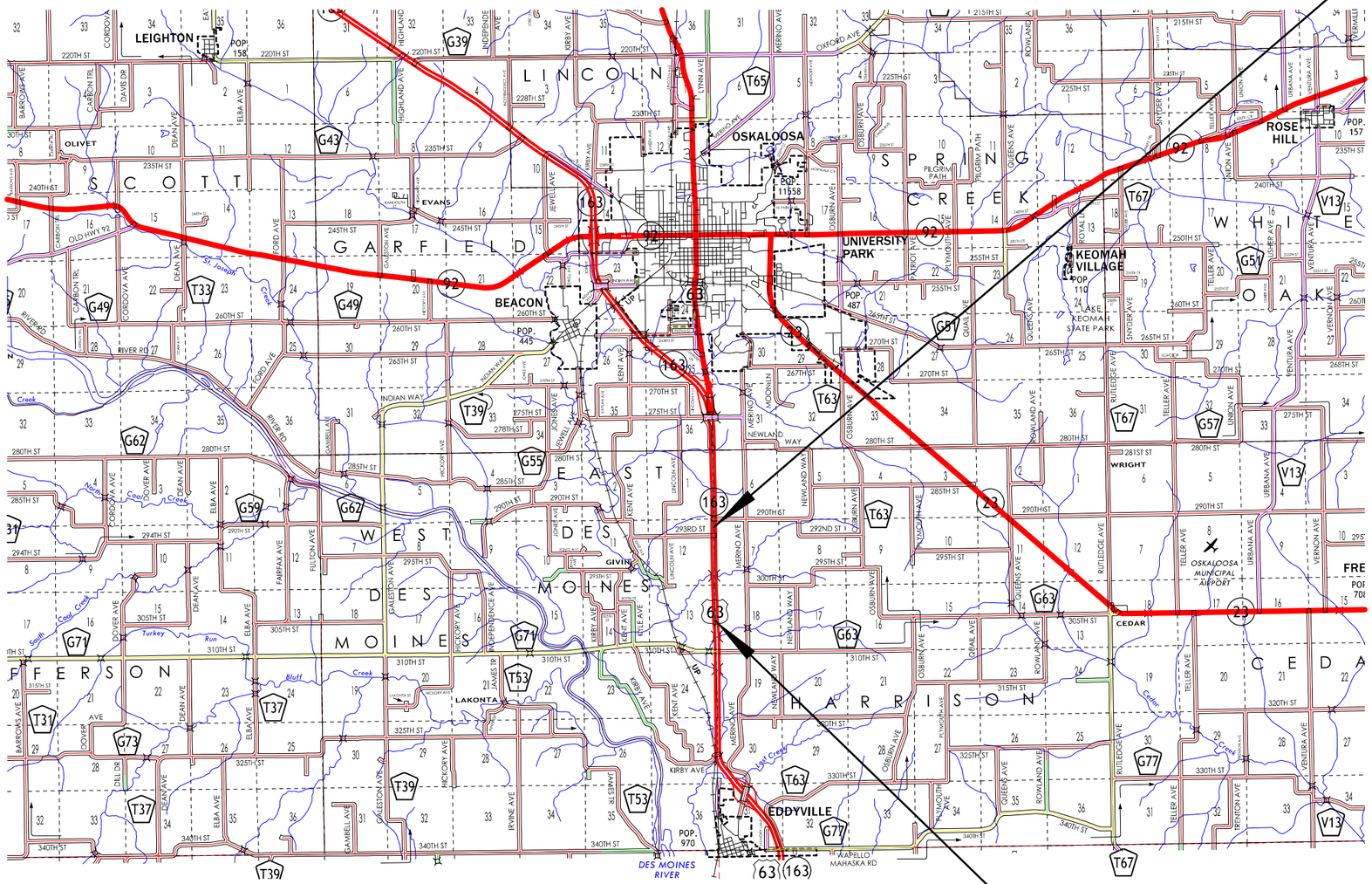

BEGIN CONSTRUCTION
M.P. 57.72
Sta. 1294+00

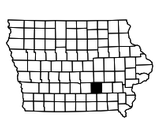

LOCATION MAP SCALE
0 1 2 3
Miles

FILE NO.	ENGLISH	DESIGN TEAM Miller/Koch	Mahaska COUNTY	PROJECT NUMBER NHSX-063-3(108)--3H-62	SHEET NUMBER A.2

FED. ROAD DIST. NO.	STATE	F PROJ. NO.	FISCAL YEAR	SHEET NO.	TOTAL SHEETS
5	IOWA	146 (3)		3A	56

TYPICAL CROSS SECTIONS

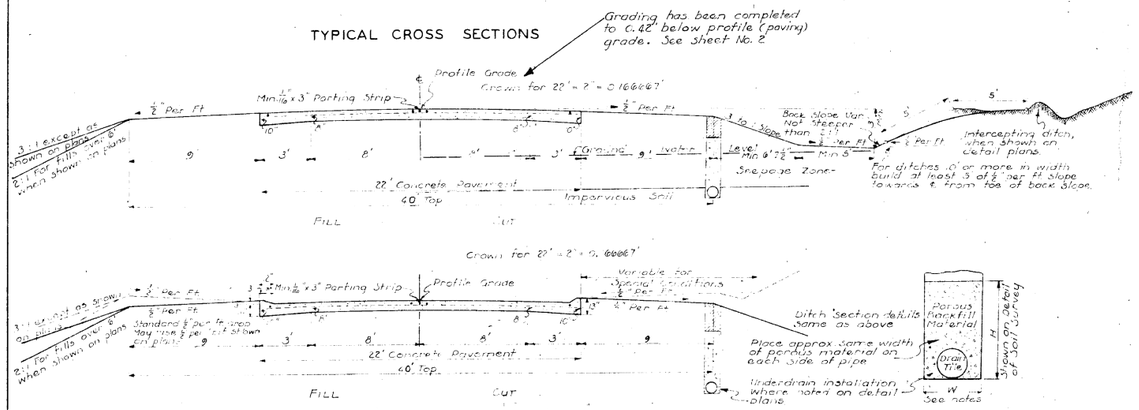

Maximum quantity of porous backfill material paid for shall not be greater than that necessary to fill a trench eighteen inches wide for trenches six feet and less in depth, or twenty-four inches wide for trenches over six feet in depth and to the depth specified.

REINFORCING PLAN 22 FT. SLAB

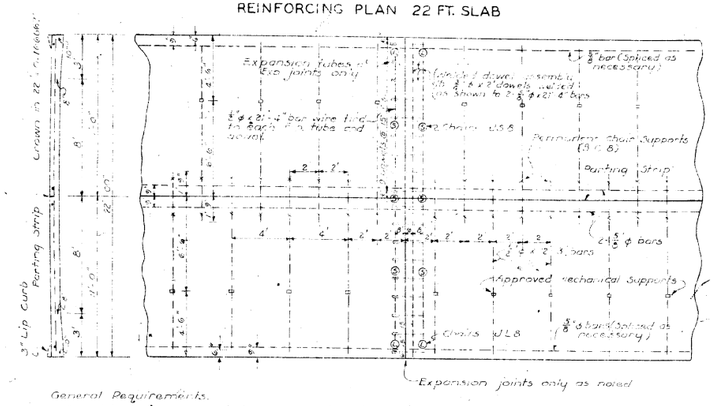

General Requirements.

1. See details for special bridge approach slab and intersection areas
2. See plans for location of expansion joints.
3. All pavement reinforcing to be held rigidly in correct position. See sheets 1 and 9.
4. Longitudinal 3/4" ϕ bars to be placed with top at bar 3" below finished pavement surface.
5. Transverse 3/4" ϕ bars to be placed under longitudinal bars and be wire tied to longitudinals
6. All splice laps of bars to be minimum of 2 ft and be securely wired.
7. Supports for bars to include side form brackets in addition to chairs and mechanical supports shown. Chairs U18-U38 and BCB are shown in detail in Bar Support Standard available at I.H.C. office.
8. The entire dowel assembly and joint material for expansion joints to be installed on the subgrade before placing concrete. The joint dowels to be parallel to the pavement surface and at right angles to the plane of the joint. Joint to be at right angle to centerline except on curves where it is to be on a radial line.
9. Other methods for supporting pavement reinforcing may be submitted for approval.
10. One inch preformed joint material to be shaped to fit crown of pavement and to be placed 2" below finished pavement surface. Dowel holes in joint material to accurately fit dowels of joint.

DETAILS FOR SUPERELEVATION OF CURVES

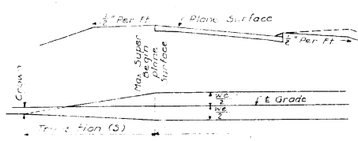

Superelevation begins at 0°30' curve with 0.0120' per ft of width, and increases uniformly to 0.0833' per ft of width at 8°-0' curve, with no change in rate for curves sharper than 8°. Superelevated curves to be built to a plane section for their entire length with transition from standard crown section to fully superelevated plane section, worked out uniformly in the transition length. Superelevated section to be rotated about ℄ grade.

Length of transition $S = 120\ we$. Where W = width of pavement in ft, e = Rate of superelevation in ft per ft of width.

Use S Min. of 60 ft and Max. of 220 ft. See notes on plans when curves are spiraled.

DETAILS FOR ENDING CURBS

Use in all cases except at flumes

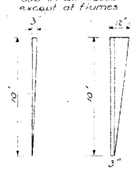

ELEVATION PLAN

STANDARD METHOD OF DOWELLING CURB TO PAVEMENT

To be used in all cases where curb can not be built integral with slab.

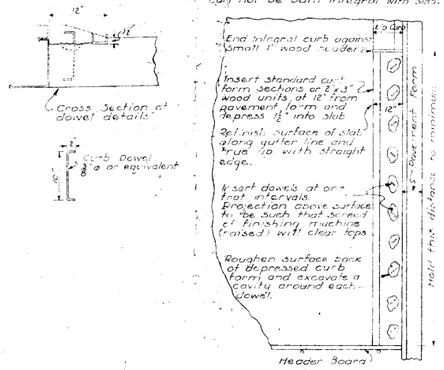

DETAILS OF CONCRETE HEADER

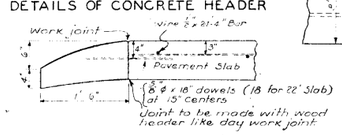

DETAILS OF RAILWAY GRADE CROSSING

One standard expansion joint shall be placed each side of and 300' to 500' away from each grade railway crossing.

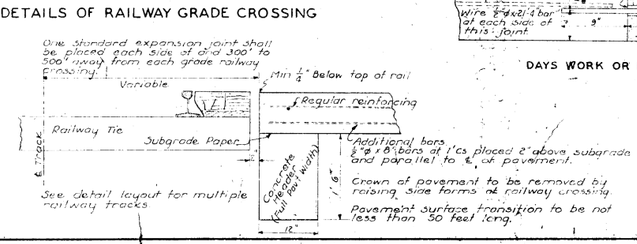

JOINT DETAILS

(Other joint details may be submitted for approval)

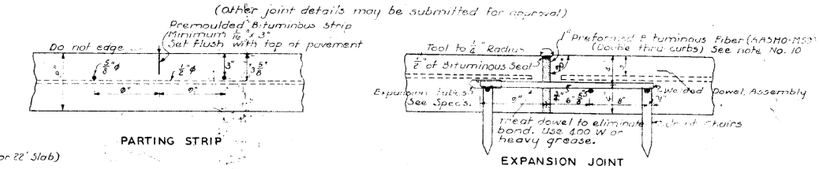

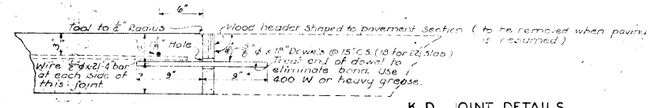

K D JOINT DETAILS

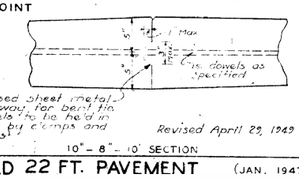

Revised April 29, 1949

10" – 8" – 10" SECTION

STANDARD 22 FT. PAVEMENT (JAN. 1947)

Mahaska Co. F Proj # 146

EXISTING PAVEMENT TYPICAL SECTIONS
NORTHBOUND LANES
STA. 1294+00 TO 1355+00
(FOR INFORMATION ONLY)

Note: See appropriate details and tabulations for additional information.

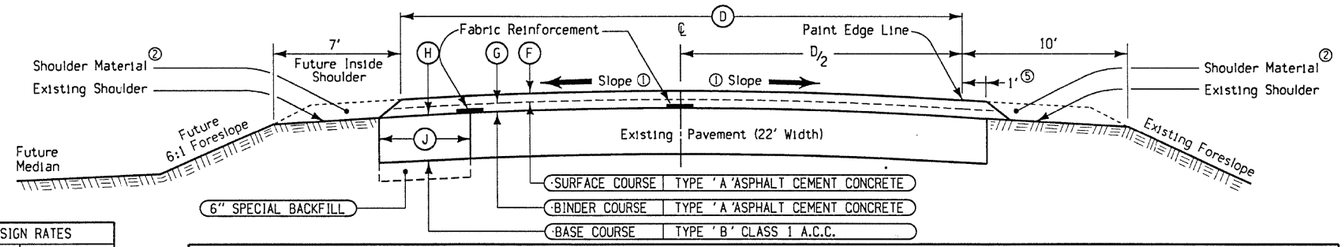

DESIGN RATES	
ITEM	RATE
Surface Course	145 lbs./cu.ft
Binder Course	145 lbs./cu.ft
Tack Coat	0.05 gal./sq.yd.
Base (Class 1)	145 lbs./cu.ft
Special Backfill	140 lbs./cu.ft

TABLE OF DESIGN QUANTITIES — Per Station

LOCATION		DIMENSIONS					CLASS 13 EXCAVATION	SPECIAL BACKFILL	PRIME AND TACK COAT	ASPHALT CEMENT	ASPHALT CEMENT CONCRETE Tons		
ROAD IDENTIFICATION	STATION TO STATION	F	G	D	H	J	Cu.Yds. ③	Tons ③	Gallons ④	Tons	SURFACE	BINDER ⑥	BASE
Ia. 137	90+00 127+00	2"	4.5"	24'	7"	3.6' ⑦	14.44	12.60	47.10	6.73	30.41	75.33	15.22
Ia. 137	199+96 252+30	2"	4.5"	24'	7"	3.6' ⑧	14.44	12.60	47.10	6.73	30.41	75.33	15.22

2602-A
MODIFIED

Notes:

① Finished slope shall match existing pavement except that the maximum allowable slope is 3.0 %, minimum allowable slope is 2.0 %. Section may be modified as directed by the engineer through areas of special shaping.

Refer to tabulation listing of superelevated curves and Standard Road Plans for additional requirements through superelevated curves.

② Shoulder material as specified elsewhere in these plans; refer to typical 7135 for "Type 'B' Granular Surfaced Shoulders".

③ Quantity is for placement of widening unit.

④ Estimated for 3 applications. Quantity includes 4.28 Gal. for placement of widening unit.

⑤ Edge line to be striped for 24' roadway width. Outside 1' by 6.5" of the A.C.C. resurfacing, on existing mainline, to be used as paved shoulder.

⑥ Quantity includes 5.44 Tons for crown correction (shifting of centerline).

⑦ Future Southbound Roadway. Place Widening Unit and 7' Shoulder on Right Side.

⑧ Future Northbound Roadway. Place Widening Unit and 7' Shoulder on Left Side.

TYPICAL CROSS SECTION ASPHALT CEMENT CONCRETE RESURFACING

2602-B
MODIFIED

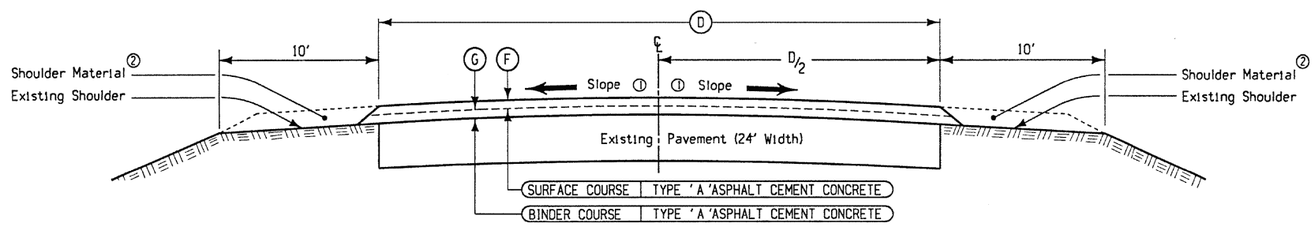

DESIGN RATES	
ITEM	RATE
Surface Course	145 lbs./cu.ft
Binder Course	145 lbs./cu.ft
Tack Coat	0.05 gal./sq.yd.

TABLE OF DESIGN QUANTITIES — Per Station

LOCATION		DIMENSIONS			PRIME AND TACK COAT	ASPHALT CEMENT	ASPHALT CEMENT CONCRETE Tons	
ROAD IDENTIFICATION	STATION TO STATION	D	F	G	Gallons	Tons	SURFACE	BINDER ⑤
Ia. 137	3290+00 ③④ 3352+70	24'	2"	2"	27.22	3.23	29.20	34.82

Notes:

① Finished slope shall match existing pavement except that the maximum allowable slope is 3.0 %, minimum allowable slope is 2.0 %. Section may be modified as directed by the engineer through areas of special shaping.

Refer to tabulation listing of superelevated curves and Standard Road Plans for additional requirements through superelevated curves.

② Shoulder material as specified elsewhere in these plans; refer to typical 7135 for "Type 'B' Granular Surfaced Shoulders".

③ Equation: Sta. 252+30 (Back) = Sta. 3290+00 (Ahead).

④ Placement of 2' widening unit from Sta. 3290+00 to Sta. 3292+00 (Left Side) is required for transitioning centerline. See typical TR-1.

⑤ Quantity includes 5.22 tons for crown correction.

TYPICAL CROSS SECTION ASPHALT CEMENT CONCRETE RESURFACING

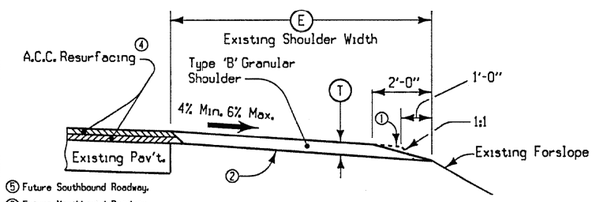

⑤ Future Southbound Roadway.
⑥ Future Northbound Roadway.
⑦ 7' Width on Right (Future Inside) and 9' on Left (Future Outside).
⑧ 7' Width on Left (Future Inside) and 9' on Right (Future Outside).
⑨ Equation: Sta. 252+30 (Back) = Sta. 3290+00 (Ahead).

LOCATION				TONS ③		T	E
ROAD IDENTIFICATION	STATION TO STATION		SIDE	Left	Right	Inches	Feet
Ia. 137 ⑤	90+00	127+00	Lt & Rt	37	28	6.5	⑦
Ia. 137 ⑥	199+96	252+30 ⑨	Lt & Rt	28	37	6.5	⑧
Ia. 137	3290+00 ⑨	3352+70	Both	27	27	4.0	10'

7135
MODIFIED

Notes:

Quantities have been determined on the basis of a design weight of 145 lbs. per cubic foot.

① Place and compact material to the dashed lines; then blade and shape to foreslope that portion above the solid line in the outer 2' and roll with loaded truck tire.

② Existing shoulder surface to be shaped to a uniform cross slope prior to placing granular shoulder material. Shape to ensure the thickness of the granular shoulder material is not less than the thickness of the resurfacing. Shaping shall not be paid for separately, but shall be considered incidental to price bid for granular shoulder material.

③ Tons per side per station.

④ Outside 1' of pavement to be used as paved shoulder. See typical 2602-A.

TYPICAL SECTION FOR TYPE 'B' GRANULAR SHOULDER

ADJACENT TO ASPHALT CEMENT CONCRETE RESURFACING

TR-1

Notes:
Shift proposed centerline back to existing centerline in 200' (Back to Back Curves).
Proposed Edgeline to parallel proposed centerline.
Equation: Sta. 252+30 (Back) = Sta. 3290+00 (Ahead).

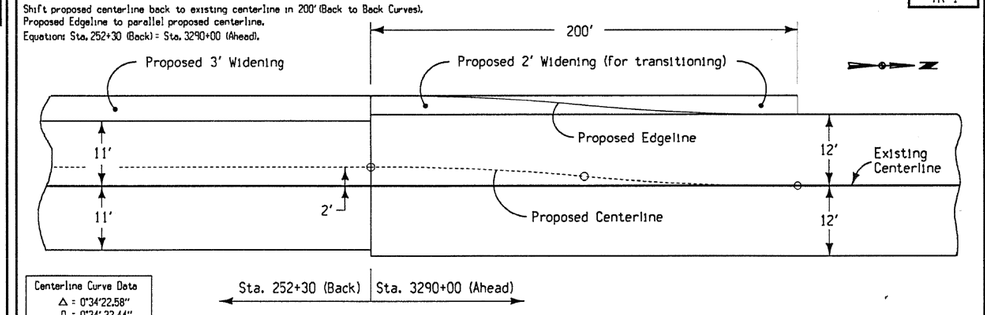

Centerline Curve Data
Δ = 0°34'22.58"
D = 0°34' 22.44"
T = 50.004'
L = 100.007'
E = 0.125'
R = 10,001'

DETAILS OF PAVEMENT CENTERLINE TRANSITION

OFFICE OF DESIGN • CADD • PRODUCED	STATE OF IOWA	FHWA REGION 7	FISCAL YEAR	MAHASKA COUNTY	PROJECT NUMBER NHS-137-3(22)--19-62

EXISTING PAVEMENT TYPICAL SECTIONS
NORTHBOUND HMA OVERLAY
STA. 1300+00 TO 1355+00
(FOR INFORMATION ONLY)

5103
MODIFIED

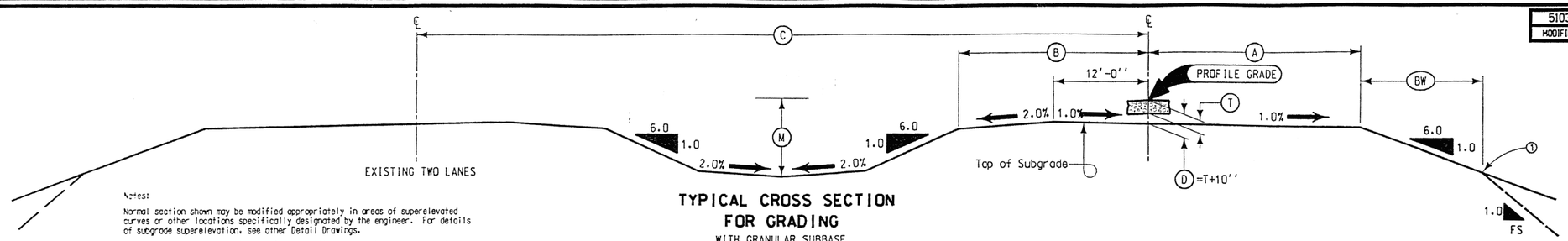

Notes:

Normal section shown may be modified appropriately in areas of superelevated curves or other locations specifically designated by the engineer. For details of subgrade superelevation, see other Detail Drawings.

Centerline median shall coincide with centerline survey shown on plans unless specified otherwise.

For typical cross sections of ditches and backslopes for roadway in cut, refer to other detail drawings within the plans.

(1) Refer to Detail Project Plan and Cross Sections for specific locations of foreslope change.

(M) Design depth of median ditch.

TYPICAL CROSS SECTION FOR GRADING

WITH GRANULAR SUBBASE

LOCATION			A	B	C	D	M	BW	SLOPE
ROAD IDENTIFICATION	STATION TO STATION		Feet	Feet	Feet	Inches	Feet	Feet	FS
IA HWY 137 (NBL)	1281+00.00 (O.R.)	1299+96.12 (O.R.)	30	26	VARIES	20	4	18	3

5103
MODIFIED

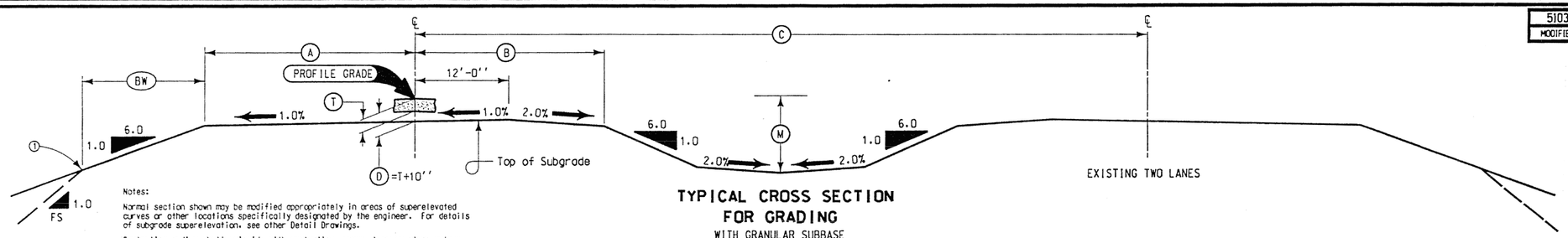

Notes:

Normal section shown may be modified appropriately in areas of superelevated curves or other locations specifically designated by the engineer. For details of subgrade superelevation, see other Detail Drawings.

Centerline median shall coincide with centerline survey shown on plans unless specified otherwise.

For typical cross sections of ditches and backslopes for roadway in cut, refer to other detail drawings within the plans.

(1) Refer to Detail Project Plan and Cross Sections for specific locations of foreslope change.

(M) Design depth of median ditch.

TYPICAL CROSS SECTION FOR GRADING

WITH GRANULAR SUBBASE

LOCATION			A	B	C	D	M	BW	SLOPE
ROAD IDENTIFICATION	STATION TO STATION		Feet	Feet	Feet	Inches	Feet	Feet	FS
IA HWY 137 (SBL)	1227+00.00 (O.R.)	1281+00.00 (O.R.)	30	26	VARIES	20	4	18	3

3217
MODIFIED

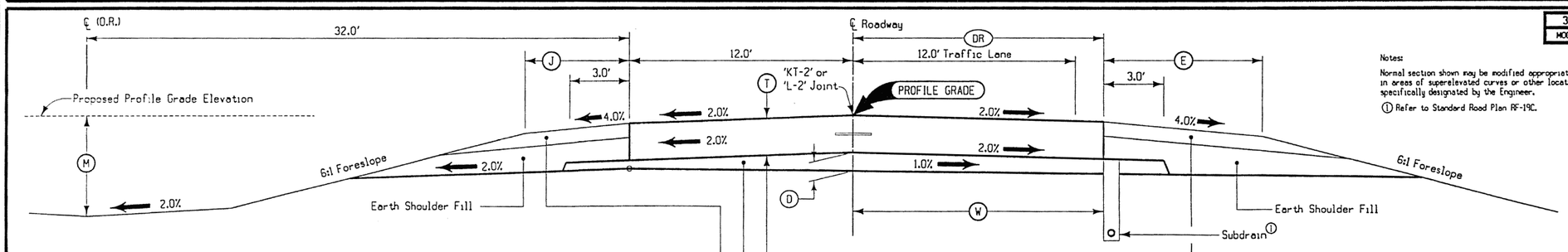

Notes:

Normal section shown may be modified appropriately in areas of superelevated curves or other locations specifically designated by the Engineer.

(1) Refer to Standard Road Plan RF-19C.

LOCATION			T	D	DR	M	W	J	E
ROAD IDENTIFICATION	STATION TO STATION		Inches	Inches	Feet	Feet	Feet	Feet	Feet
IA HWY 137	1191+00 (NB)	1299+96.12 (NB)	10	10	14.0	4.0	14.0	6.0	8.0
IA HWY 137	1227+00 (SB)	1243+71.81 (SB)	10	10	14.0	4.0	14.0	6.0	8.0
IA HWY 137	1247+16.80 (SB)	1415+00.00 (SB)	10	10	14.0	4.0	14.0	6.0	8.0

TYPICAL CROSS SECTION 4-LANE DIVIDED ROADWAY PCC PAVING WITH GRANULAR SHOULDERS

STATE OF IOWA	FHWA REGION 7	FISCAL YEAR		MAHASKA COUNTY	PROJECT NUMBER	NHS-137-3(19)--19-62

EXISTING PAVEMENT TYPICAL SECTIONS
SOUTHBOUND LANES
STA. 1294+00 TO 1355+00
(FOR INFORMATION ONLY)

FILE NO.	ENGLISH	DESIGN TEAM **Miller/Koch**	**Mahaska** COUNTY	PROJECT NUMBER **NHSX-063-3(108)--3H-62**	SHEET NUMBER **B.3**

Full Depth PCC Shoulder

Direction of Travel	BEGIN STATION	END STATION	(P) Feet
			4_P_FullPCC_ MODIFIED
Both	1294+00	1297+00	6
NB	1316+50	1319+80.41	6
NB	1321+88.80	1323+50	6
SB	1316+50	1323+50	6
Both	1328+00	1339+00	6
Both	1342+00	1345+00	6
Both	1353+50	1355+00	6

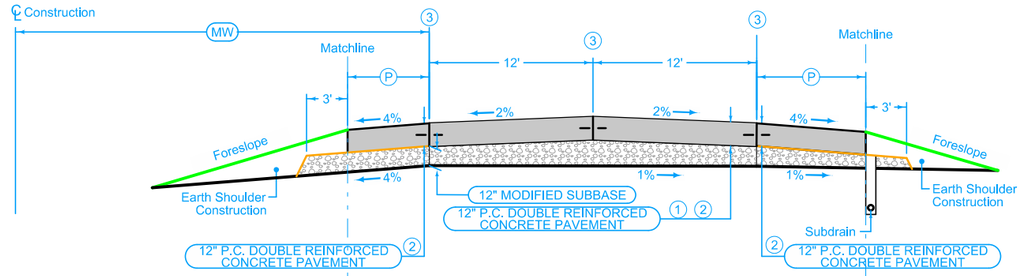

Section shown in the direction of traffic.

Direction of Travel	BEGIN (4) STATION	END (4) STATION	(MW) Feet
			4DH_Dprs_ 04-21-20
Both	1294+00	1297+00	Var
NB	1316+50	1319+80.41	Var
NB	1321+88.80	1323+50	Var
SB	1316+50	1323+50	Var
Both	1328+00	1339+00	Var
Both	1342+00	1345+00	Var
Both	1353+50	1355+00	Var

Full Depth PCC Shoulder

Direction of Travel	BEGIN STATION	END STATION	(P) Feet
			4_P_FullPCC_ MODIFIED
Both	1294+00	1297+00	10
NB	1316+50	1319+80.41	10
NB	1321+88.80	1323+50	10
SB	1316+50	1323+50	10
Both	1328+00	1339+00	10
Both	1342+00	1345+00	10
Both	1353+50	1355+00	10

(1) Refer to Details below for Reinforced Bar Layouts and Jointing.

(2) Bid as Standard or Slip Form Portland Cement Concrete Pavement, Class C, Class 3 Durability, 12 in.

(3) Longitudinal joint: Single pour - Saw cut joint per Detail B (PV-101)
Two pours - Use 'BT-2' joint

Paved Shoulder at Guardrail

PCC Shoulder Jointing:
Longitudinal joint: BT-2
Transverse joints: C at 17' intervals

Direction of Travel	BEGIN STATION	END STATION	(P) Feet
			4_P_Guard_ 04-21-20
NB	1318+97	1319+80.41	Var

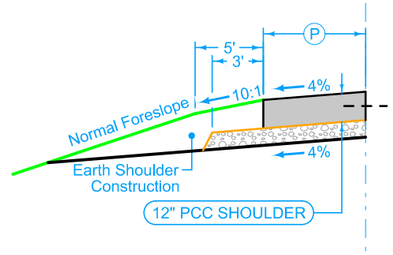

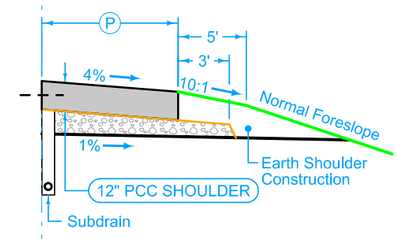

Paved Shoulder at Guardrail

PCC Shoulder Jointing:
Longitudinal joint: BT-2
Transverse joints: C at 17' intervals

Direction of Travel	BEGIN STATION	END STATION	(P) Feet
			4_P_Guard_ 04-21-20
NB	1318+97	1319+80.41	Var

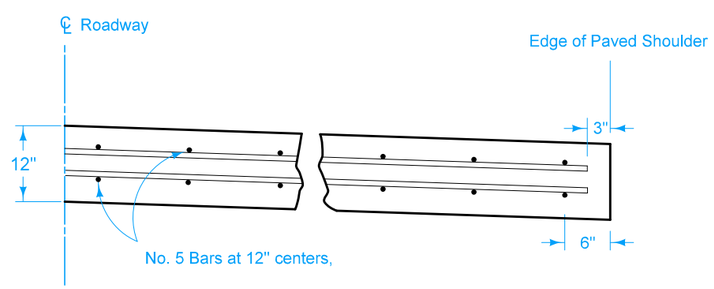

Transverse Half Section

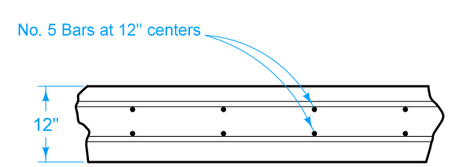

PARTIAL LONGITUDINAL SECTION

Provide min. 2" clearance for all reinforcement.

Place Pavement Joint no closer than 5 feet from existing joint.

Lap all bars 24 inches.

Place RD joints at both tie in to existing pavement.

Terminate double reinforcing bars 3" prior to RD joints.

See Tab 100-24 for pavement quantities.
See Tab 112-9 for shoulder quantities.

U.S. 63

7158
Modified

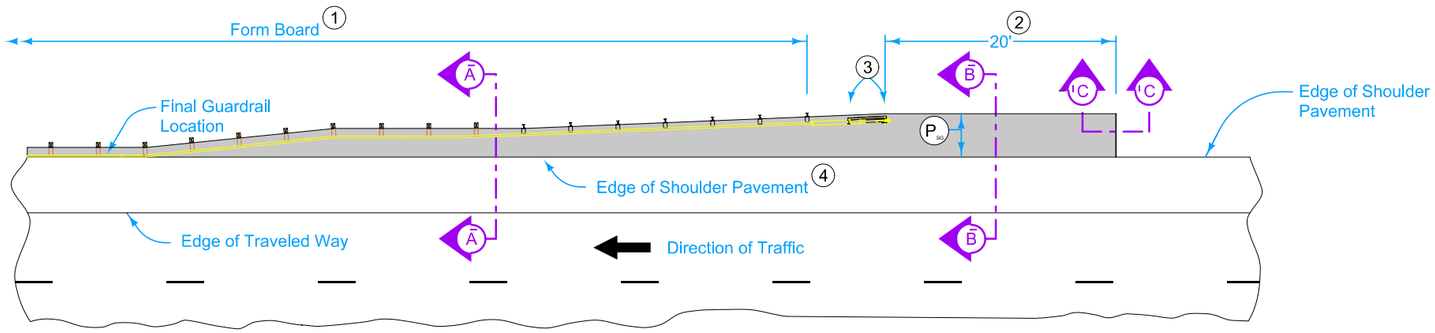

PLAN VIEW

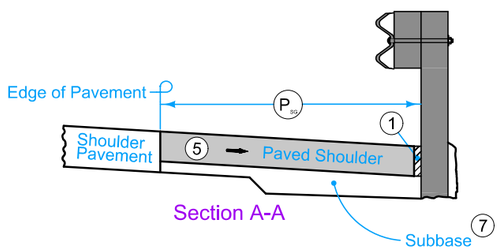

Section A-A

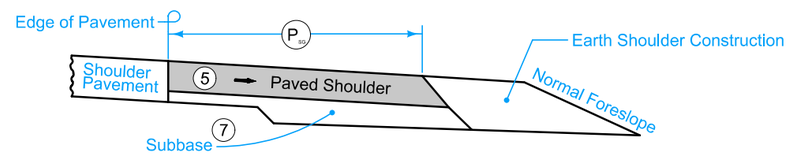

Section B-B

NEW CONSTRUCTION 6

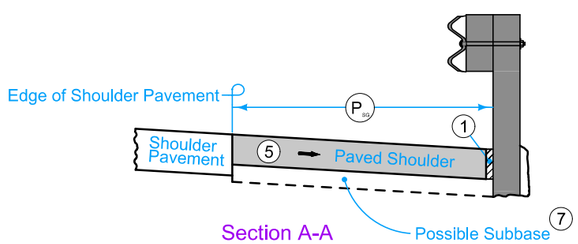

Section A-A

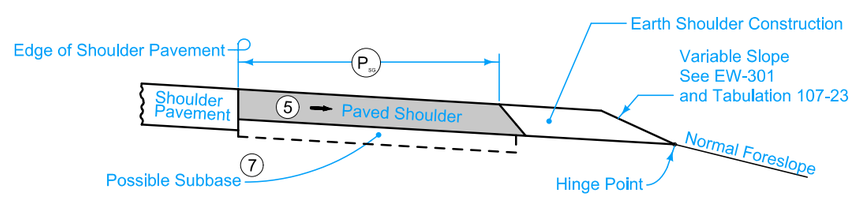

Section B-B

EXISTING SHOULDER

12" PCC Paved Shoulder at guardrail with the following jointing layout:

Match mainline pavement joint spacing. When mainline pavement is 8" or greater in thickness, place additional transverse 'C' joints in shoulder at mid-panel of the mainline pavement. Place longitudinal 'C' joint at P/2 from edge of mainline pavement when P is greater than 10' wide. Terminate longitudinal joint at transverse joint less than 10' in length.

Refer to Tabulation 112-9 for shoulder quantities.

1. PCC option only: When guardrail posts are installed prior to construction of PCC paved shoulder, fasten form board to the face of guardrail posts for the length shown.
2. Continue paved shoulder 20 feet beyond the center of the first post.
3. Shoulder may be notched for first 2 posts or post sleeves may be installed through pavement. Do not drive posts through pavement.
4. 'BT' (per PV-101) joint for PCC shoulder.
5. Match shoulder slope.
6. The Contractor has the option to pave the paved shoulder at guardrail and the full width paved shoulder as one operation.
7. Refer to other details in the plan.

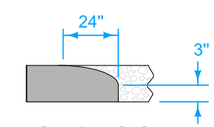

Section C-C

Roll down at granular shoulder or earth.

PAVED SHOULDER AT GUARDRAIL
(ADJACENT TO FULL WIDTH PAVED SHOULDER)

ESTIMATED PROJECT QUANTITIES AND REFERENCE NOTES

Roadway Items : Roadway Items
Non-Participating :

Item no.	Item Code	Item	Unit	Quantities Estimated			Estimate Reference Notes
				Roadway Items	Non-Participating	Total	
1	2102-2625000	EMBANKMENT-IN-PLACE	CY	69		69	Provide borrow material according to Section 2107 of the Standard Specifications. Refer to Tab. 107-23. Material shall be provided by the Contractor.
2	2102-2713090	EXCAVATION, CLASS 13, WASTE	CY	6,657		6,657	Refer to Typicals on B sheets.
3	2105-8425005	TOPSOIL, FURNISH AND SPREAD	CY	875		875	Furnish and spread a minimum of 4 inches of topsoil.
4	2115-0100000	MODIFIED SUBBASE	CY	8,633.4		8,633.4	Refer to Typicals on B Sheets and Tabs. 100-24 and 112-09.
5	2122-5190012	PAVED SHOULDER, P.C. CONCRETE, 12 IN.	SY	55.6		55.6	Refer to Typicals on B Sheets and Tab. 112-09.
6	2123-7450000	SHOULDER CONSTRUCTION, EARTH	STA	97.8		97.8	Requires 4398.32 cu. yds. for Earth Shoulder Fill. Requires a minimum of 4 inches of topsoil. Refer to Tab. 112-09.
7	2301-0690204	BRIDGE APPROACH, BR-204	SY	671.2		671.2	Refer to Tab. 112-06.
8	2301-1033120	STANDARD OR SLIP FORM PORTLAND CEMENT CONCRETE PAVEMENT, CLASS C, CLASS 3 DURABILITY, 12 IN.	SY	21,740.7		21,740.7	Price bid for double reinforced pavement is full compensation for constructing the pavement as detailed in the plans, including all necessary reinforcement required. Refer to Typicals on B Sheets and Tab. 100-24. Shoulders will not be evaluated for smoothness. Macrotexture will not be required on the shoulder pavement.
9	2301-7000110	PAYMENT ADJUSTMENT INCENTIVE/DISINCENTIVE FOR PCC PAVEMENT THICKNESS (BY SCHEDULE)	EACH	16,124		16,124	Excludes shoulders.

Item no.	Item Code	Item	Unit	Quantities			Estimate Reference Notes
				Estimated			
				Roadway Items	Non-Participating	Total	
10	2317-7000110	PAYMENT ADJUSTMENT INCENTIVE/DISINCENTIVE FOR PCC PAVEMENT SMOOTHNESS (BY SCHEDULE)	EACH	10,336		10,336	Excludes shoulders.
11	2412-0000100	LONGITUDINAL GROOVING IN CONCRETE, BRIDGE DECK	SY	684.4		684.4	Refer to Tab. 100-28.
12	2502-6745952	REMOVAL OF SUBDRAIN	LF	3,275		3,275	Refer to Tab. 110-19 on CS Sheets for locations and details.
13	2502-8212034	SUBDRAIN, LONGITUDINAL, (SHOULDER) 4 IN. DIA.	LF	5,882		5,882	Refer to Tab. 104-09A on CS Sheets for locations and details.
14	2502-8221306	SUBDRAIN OUTLET, DR-306	EACH	35		35	
15	2503-0500401	BRIDGE END DRAIN, DR-401	EACH	2		2	Refer to Tab. 104-08A.
16	2505-4008120	REMOVAL OF STEEL BEAM GUARDRAIL	LF	125		125	Refer to Tab. 110-07A.
17	2505-4008300	STEEL BEAM GUARDRAIL	LF	100		100	Refer to Tab. 108-08A.
18	2505-4008410	STEEL BEAM GUARDRAIL BARRIER TRANSITION SECTION, BA-201	EACH	2		2	
19	2505-4021010	STEEL BEAM GUARDRAIL END ANCHOR, BOLTED	EACH	2		2	
20	2505-4021720	STEEL BEAM GUARDRAIL TANGENT END TERMINAL, BA-205	EACH	2		2	
21	2510-6745850	REMOVAL OF PAVEMENT	SY	19,010.6		19,010.6	Refer to Tabs.110-1 and 102-5.
22	2526-8285040	CONSTRUCTION SURVEY, LOCATION SURVEY	LS	1		1	Contractor to survey the existing profile, horizontal geometry, and key points before pavement removal in order to re-establish during construction. Provide the completed electronic Survey Centerline Alignment in LandXML (.xml) format meeting Iowa DOT CADD standards and compatible with department field and office software used for staking, layout, and digital delivery. Include the following with the submission: 1. IaRCS zone used, and 2. Alignment error report (as described above).

Item no.	Item Code	Item	Unit	Quantities Estimated Roadway Items	Non-Participating	Total	Estimate Reference Notes
23	2527-9263005	RAISED PAVEMENT MARKERS	EACH	760		760	Refer to Standard Road Plan TC-61 for details.
24	2527-9263137	PAINTED SYMBOLS AND LEGENDS, WATERBORNE OR SOLVENT-BASED	EACH	16		16	Refer to Tab. 108-29.
25	2527-9263181	PAVEMENT MARKINGS REMOVED	STA	429		429	Refer to Tab. 108-22.
26	2527-9263190	SYMBOLS AND LEGENDS REMOVED	EACH	16		16	Refer to Tab. 108-29.
27	2527-9263209	PAINTED PAVEMENT MARKINGS, WATERBORNE OR SOLVENT-BASED	STA	1,450.4		1,450.4	Refer to Tab. 108-22.
28	2527-9263231	REMOVABLE TAPE MARKINGS, WET RETROREFLECTIVE	STA	147.4		147.4	
29	2527-9270112	GROOVES CUT FOR PAVEMENT MARKINGS	STA	752.1		752.1	
30	2528-2518000	SAFETY CLOSURE	EACH	22		22	Refer to Tab. 108-13A.
31	2528-2518010	REMOVE AND REINSTALL CROSSOVER BARRICADES	EACH	2		2	Refer to U Sheets for additional information. Method of Measurement: Each crossover barricade removed and reinstalled will be counted. Basis of Payment: The price bid for "REMOVE AND REINSTALL CROSSOVER BARRICADES", EACH, is considered full compensation for furnishing all materials and work necessary to remove and reinstall the barricade as detailed.
32	2528-8400048	TEMPORARY BARRIER RAIL, CONCRETE	LF	300		300	Refer to Tab. 108-33 and the U Sheets for details. All temporary barrier rail shall be nominal 12'-6" long concrete units.
33	2528-8400055	TEMPORARY TO PERMANENT BARRIER CONNECTION	EACH	2		2	Refer to U Sheets for details.
34	2528-8400157	TEMPORARY FLOODLIGHTING LUMINAIRE	EACH	4		4	Refer to Tab. 108-27.
35	2528-8445110	TRAFFIC CONTROL	LS	1		1	Refer to Traffic Control Plan on J Sheets.
36	2528-9109020	TEMPORARY LANE SEPARATOR SYSTEM	LF	3,043		3,043	Refer to Tab. 108-35.

Item no.	Item Code	Item	Unit	Quantities			Estimate Reference Notes
				Estimated			
				Roadway Items	Non-Participating	Total	
37	2528-9290050	PORTABLE DYNAMIC MESSAGE SIGN (PDMS)	CDAY	500		500	For possible Traffic Incident Management (TIM) detour route for the duration of the project.
38	2533-4980005	MOBILIZATION	LS	1		1	
39	2548-0000200	MILLED SHOULDER RUMBLE STRIPS, PCC SURFACE	STA	95.8		95.8	Refer to Tab. 112-10.
40	2551-0000130	TEMP CRASH CUSHION, SEVERE USE (SU)	EACH	2		2	Refer to Tab. 108-30 and Section 2551 of the Standard Specifications.
41	2555-0000010	DELIVER AND STOCKPILE SALVAGED MATERIALS	LS		1	1	Refer to Tab. 110-13.

STANDARDS

The following Standards apply to construction work on this project.

Number	Date	Title
BA-200	04-21-26	Steel Beam Guardrail Components
BA-201	10-18-22	Steel Beam Guardrail Barrier Transition Section (MASH TL-3)
BA-202	04-15-25	Steel Beam Guardrail Bolted End Anchor
BA-205	10-17-23	Steel Beam Guardrail Tangent End Terminal (MASH TL-3)
BA-250	10-21-25	Steel Beam Guardrail Installation at Concrete Barrier or Bridge End Post (MASH TL-3)
BA-401	04-20-21	Temporary Barrier Rail (Precast Concrete)
BA-500	04-20-21	Temporary Crash Cushions Sand Barrel
DR-303	10-17-17	Subdrains (Longitudinal)
DR-306	10-17-23	Precast Concrete Headwall for Subdrain Outlets
DR-401	04-16-24	Scour Protection for Bridge End Drain
EW-301	04-16-24	Guardrail Grading
LI-130	10-17-17	Temporary Floodlighting Luminaires
PM-110	10-15-24	Line Types
PM-111	04-21-20	Symbols and Legends
PM-115	04-15-25	Grooving for Line Types
PV-12	04-16-24	Milled Shoulder Rumble Strips
PV-101	10-21-25	Joints
PV-102	10-21-25	PCC Curb Details
SI-173	04-19-16	Object Markers
SI-211	10-18-22	Object Marker and Delineator Placement with Guardrail
SI-881	04-16-19	Special Signs for Workzones
TC-1	10-15-19	Work Not Affecting Traffic (Two-Lane or Multi-Lane)
TC-61	10-21-25	Two-Lane, Two-way Operation
TC-252	10-21-25	Routes Closed to Traffic
TC-283	04-18-23	Surveying Operations
TC-402	04-18-23	Work Within 15 ft of Traveled Way

PCC PAVEMENT

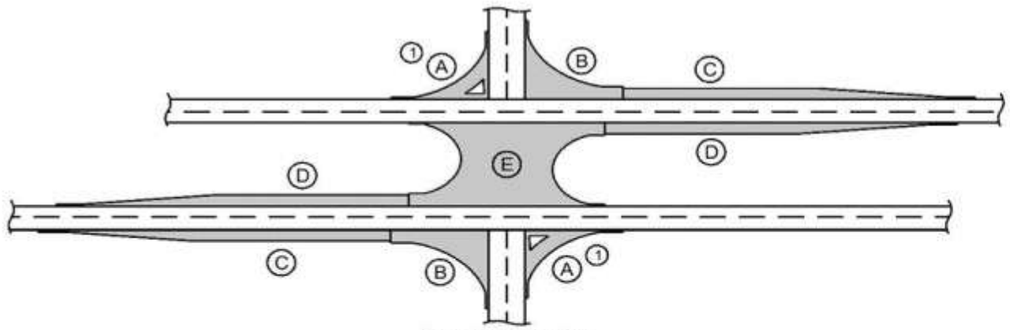

Typical Intersection

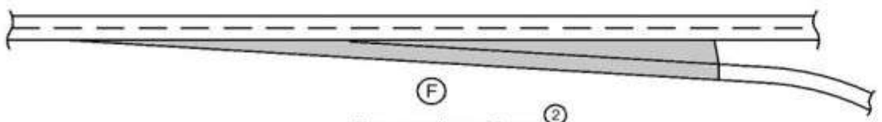

Ramp or Loop Taper (2)

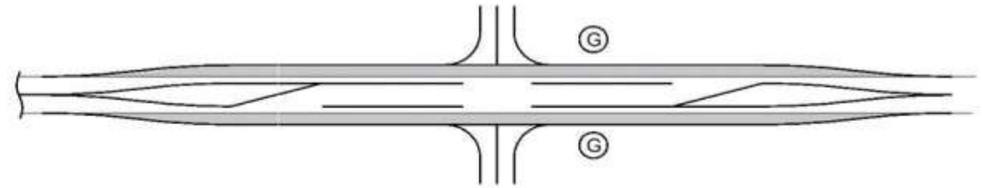

Channelized Intersection
Widen Existing Roadway

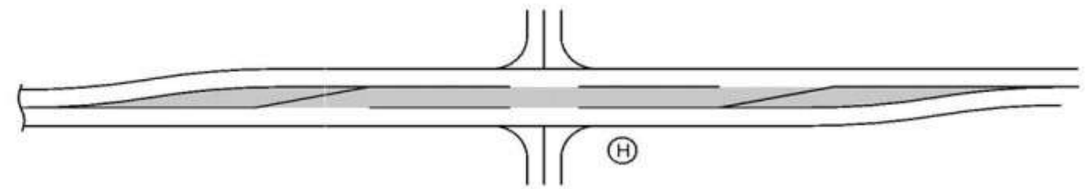

Channelized Intersection
Reconstructed Roadway

(1) Does not include raised island area or curb. Refer to tabulation 112-4 for quantities.
(2) Refer to PV-410, PV-411, PV-412, and PV-414.
(3) Quantity includes Pavement Header.

Line No.	Road Identification	Direction of Travel	Station From	Station To	Width (FT)	Length (FT)	Area (SY)	Area A(1) (SY)(3)	Area B (SY)(3)	Area C (SY)(3)	Area D (SY)(3)	Area E (SY)(3)	Area F(2) (SY)(3)	Area G (SY)(3)	Area H (SY)(3)	Area by Thickness - Thickness(IN)	Area by Thickness - Area (SY)	Polymer Grid (SY)	Special Backfill (TON)	Modified Subbase (CY)	Granular Subbase (SY)	Remarks
1.0	US 63	NB	1294+00.00	1297+00.00	40.0	300.00	1333.33									12.0	1333.3			511.11		
2.0	US 63	SB	1294+00.00	1297+00.00	40.0	300.00	1333.33									12.0	1333.3			511.11		
3.0	US 63	NB	1316+50.00	1319+80.41	40.0	491.00	1471.11									12.0	1471.1			836.52		End at Bridge Approach Pavement
4.0	US 63	NB	1321+88.80	1323+50.00	40.0	161.20	714.13									12.0	714.1			274.30		Begin from Bridge Approach Pavement
5.0	US 63	SB	1316+50.00	1323+50.00	40.0	700.00	3111.11									12.0	3111.1			1192.60		
6.0	US 63	NB	1328+00.00	1339+00.00	40.0	1100.00	4888.89									12.0	4888.9			1874.10		
7.0	US 63	SB	1328+00.00	1339+00.00	40.0	1100.00	4888.89									12.0	4888.9			1874.10		
8.0	US 63	NB	1342+00.00	1345+00.00	40.0	300.00	1333.33									12.0	1333.3			511.11		
9.0	US 63	SB	1342+00.00	1345+00.00	40.0	300.00	1333.33									12.0	1333.3			511.11		
10.0	US 63	NB	1353+50.00	1355+00.00	40.0	150.00	666.67									12.0	666.7			255.56		
11.0	US 63	SB	1353+50.00	1355+00.00	40.0	150.00	666.67									12.0	666.7			255.56		
Total:																	**21740.7**			**8607.18**		

Bid Items:
STANDARD OR SLIP FORM PORTLAND CEMENT CONCRETE PAVEMENT, CLASS C, CLASS 3 DURABILITY, 12 IN. 21,740.7 SY
MODIFIED SUBBASE 8607.2 CY

100_28
8/15/22

LONGITUDINAL GROOVING

Line No.	Location	Total (SY)	Remarks
1.0	1319+80.41	342.2	South Bridge Approach Pavement
2.0	1321+88.80	342.2	North Bridge Approach Pavement
Total:		**684.4**	

Bid Item:
Longitudinal Grooving in Concrete, Bridge Deck 684.4 SY

EXISTING PAVEMENT

Line No.	County	Route	Direction of Travel	Begin Ref. Location Sign	End Ref. Location Sign	Year	Type	Project Number	Surface Type	Surface Depth (IN)	Base Type	Base Depth (IN)	Subbase Type	Subbase Depth (IN)	Removal Type	Removal Depth (IN)	Coarse Aggregate Source	Coarse Aggregate Type	Course Aggregate Durability Class	Reinforcement Type	Remarks
1.0	Mahaska	US 63	SB	56.79	60.33	1998		NHS-137-3(19)--19-62	PCC	10.0	GSB	10.0					Sully Mine	C. LST.	1		
2.0	Mahaska	US 63	NB	57.94	58.92	2017	M	MP-63-5(709)34--76-90	PCC	10.5											PCC Patching
3.0	Mahaska	US 63	NB	57.94	58.92	1995		NHS-137-3(22)--19-62	AAC	2.0	AAC	4.5					Harsco/Heckett	Slag			Widen 1.1M
4.0	Mahaska	US 63	NB	57.94	58.92	1949		F-146(3)	PC8	8.0							Eddyville	Gravel	2		
5.0	Mahaska	US 63	NB	58.92	60.11	2021	M	MP-063-5(711)34--76-90													PCC Patching
6.0	Mahaska	US 63	NB	58.92	60.11	2019	M	MP-063-5(710)34--76-90													PCC Patching
7.0	Mahaska	US 63	NB	58.92	60.11	2017	M	MP-63-5(709)34--76-90	PCC	10.5											PCC Patching
8.0	Mahaska	US 63	NB	58.92	60.11	1995		NHS-137-3(22)--19-62	AAC	2.0	AAC	2.0					Harsco/Heckett	Slag			
9.0	Mahaska	US 63	NB	58.92	60.11	1963		F-146(7)	PCC	9.0							Langstratt	C. LST.	3		

104_08A
8/15/22

SCOUR PROTECTION OR ROCK FLUME FOR BRIDGE END DRAIN

Refer to Standard Road Plan DR-401 and DR-402

Line No.	Bridge Station	Bridge Corner	Distance DI-1 or DI-2 (FT)	Bridge End Drain Type	Special Ditch Control, Wood Excelsior Mat EC-101 (SQ)	Turf Reinforced Mat (TRM) Type 2 EC-104 (SQ)	Transition Mat EC-105 (SF)	Macadam Stone Base (TONS)	Engineering Fabric (SY)	Erosion Stone (TON)	Remarks
1.0	1320+84.00	NW	43.0	DR-401	2.1	2.4	32.0				
2.0	1320+84.00	NE	43.0	DR-401	2.1	2.4	32.0				
Total:					**4.2**	**4.8**	**64**				

Bid Item:
BRIDGE END DRAIN, DR-401 2 EA

GRADING FOR GUARDRAIL INSTALLATIONS

Refer to EW-301.

(1) Lane(s) to which the installation is adjacent.

Line No.	Direction of Traffic (1)	Station	Side	Foreslope at Guardrail	X1 (FT)	Y1 (FT)	X2 (FT)	Y2 (FT)	X3 (FT)	Y3 (FT)	X4 (FT)	Y4 (FT)	Z (FT)	Excavation Class 10 (CY)	Embankment-in-Place (CY)	Remarks
1.0	NB	1320+46.00	Median	4:1	75.8	1.6					125.0	3.6	57.0		30.0	
2.0	NB	1320+46.00	Right	4:1	75.8	1.6					125.0	3.6	57.0		30.0	
3.0	NB	1323+00.00	Median	3:1											4.5	Embankment for Temporary Crash Cushion
4.0	NB	1323+00.00	Right	3:1											4.5	Embankment for Temporary Crash Cushion
Total:															**69**	

Bid Item:
EMBANKMENT-IN-PLACE 69 CY

STEEL BEAM GUARDRAIL AT CONCRETE BARRIER OR BRIDGE RAIL END SECTION

Possible Standards: BA-200, BA-201, BA-202, BA-205, BA-206, BA-209, BA-210, BA-211, BA-221, BA-225, BA-250, BA-260, LS-625, LS-626, LS-630, LS-635, SI-172, SI-173 and SI-211.

(1) Lane(s) to which the obstacle is adjacent.
(2) Not a bid item. Incidental to guardrail installation.

Line No.	Direction of Travel (1)	Side	Station	Offset (FT)	Barrier Transition Section	Barrier Transition Section (EA)	End Terminal	End Terminal Count (EA)	VT1 (LF)	VF (LF)	VT2 (LF)	ET (LF)	BA-211 Station	BA-211 (Type)	SI-211 (Type) (2)	Delineator SI-172 Type 1 (EA) (2)	Object Marker Type 2 (EA) (2)	Object Marker Type 3 Lt (EA)(2)	Object Marker Type 3 Rt (EA)(2)	Bolted End Anchor BA-202 (Type)	Bolted End Anchor BA-202 (EA)	Post Adapter BA-210 (EA)	Steel Beam Guardrail BA-200 (LF)	Remarks
1.0	NB	Median	1320+47.00	6.0	BA-201	1	BA-205	1	53.125		37.50	47.70						1		C	1		50.0	
2.0	NB	Outside	1320+47.00	10.0	BA-201	1	BA-205	1	53.125		37.50	47.70							1	C	1		50.0	
Total:						**2**		**2**										**1**	**1**		**2**		**100**	

Bid Items:
STEEL BEAM GUARDRAIL END ANCHOR, BOLTED 2 EA
STEEL BEAM GUARDRAIL BARRIER TRANSITION SECTION, BA-201 2 EA
STEEL BEAM GUARDRAIL 100 LF
STEEL BEAM GUARDRAIL TANGENT END TERMINAL, BA-205 2 EA

108_13A
3/27/25

SAFETY CLOSURES

Refer to Section 2528 of the Standard Specifications

Station	Road Closure Qty.	Hazard Closure Qty.	Remarks
1268+60.00	1		Beginning of Project - Stage 1
1273+00.00	1		Median - Stage 1
1293+00.00	2		Entrances - Stage 1
1327+65.00	2		Entrance - Stage 1
1352+50.00	2		Entrance - Stage 1
1365+50.00	2		290th St - Stage 1
1383+45.00	1		End of Project - Stage 1
1268+60.00	1		Beginning of Project - Stage 2
1273+00.00	2		Entrance - Stage 2
1293+00.00	2		Entrance - Stage 2
1327+65.00	2		Entrance - Stage 2
1352+50.00	2		293rd St - Stage 2
1365+50.00	1		Median - Stage 2
1383+50.00	1		End of Project - Stage 2
Total:	**22**		

Bid Item:
SAFETY CLOSURE 22 EA

PAVEMENT MARKING LINE TYPES

Line factors based on 6-inch wide continuous line.
*BCY4 - Place on the same side of the roadway to match existing markings near the project.
**NPY4 - Estimating purposes only. No Passing Zone Lines will be located in the field.
***MNY6 - Factor of 1.00 includes number of 6-inch passes to cover median nose area.

BCY4: Broken Centerline (Yellow) @ 0.17
BCY6: Broken Centerline (Yellow) @ 0.25
BLC6: Broken Line Contrast (White/Black) @ 0.50
BLW4: Broken Lane Line (White) @ 0.17
BLW6: Broken Lane Line (White) @ 0.25
CBW6: Crosswalk Bar (White) @ 10.00
CHW8: Channelizing Line (White) @ 1.33
CHW10: Channelizing Line (White) @ 1.67
CHY8: Channelizing Line (Yellow) @ 1.33
CHY10: Channelizing Line (Yellow) @ 1.67
CLW6: Crosswalk Line (White) @ 2.00
DCY4: Double Centerline (Yellow) @ 1.34
DCY6: Double Centerline (Yellow) @ 2.00
DDY4: Double Dotted Line (Yellow) @ 0.44
DDY6: Double Dotted Line (Yellow) @ 0.67
DLW4: Dotted Line (White) @ 0.22
DLW6: Dotted Line (White) @ 0.33
DLY4: Dotted Line (Yellow) @ 0.22
DLY6: Dotted Line (Yellow) @ 0.33
ELW4: Edge Line Right (White) @ 0.67
ELW6: Edge Line Right (White) @ 1.00
ELY4: Edge Line Left (Yellow) @ 0.67
ELY6: Edge Line Left (Yellow) @ 1.00
LDW8: Lane Drop (White) @ 0.33
LDW10: Lane Drop (White) @ 0.42
MNY6: Median Nose (Yellow) @ 1.00
NPY4: No Passing Zone Line (Yellow) @ 0.84
NPY6: No Passing Zone Line (Yellow) @ 1.25
RLW4: Ramp Edge Line Right (White) @ 0.67
RLW6: Ramp Edge Line Right (White) @ 1.00
RLY4: Ramp Edge Line Left (Yellow) @ 0.67
RLY6: Ramp Edge Line Left (Yellow) @ 1.00
SLW2: Stop Line (White) @ 4.00
SLW4: Solid Lane Line (White) @ 0.67
SLW6: Solid Lane Line (White) @ 1.00
SPW4: Sloped Curb 4" (White) @ 2.16
SPW6: Sloped Curb 6" (White) @ 2.28
SPY4: Sloped Curb 4" (Yellow) @ 2.16
SPY6: Sloped Curb 6" (Yellow) @ 2.28
STW6: Standard Curb 6" (Yellow) @ 2.03
STY6: Standard Curb 6" (Yellow) @ 2.03
YLW2: Yield Line (White) @ 1.15

Line No.	Road ID	Station From	Station To	Lane	Marking Type	Left	Center	Right	Groove Marking Needed?	Groove Qty. (STA)	BLW6 (STA)	BLW6 Factored (STA)	CHW8 (STA)	CHW8 Factored (STA)	CHY8 (STA)	CHY8 Factored (STA)	DCY6 (STA)	DCY6 Factored (STA)	ELW6 (STA)	ELW6 Factored (STA)	ELY6 (STA)	ELY6 Factored (STA)	Remarks
1.0	US 63 SB	1271+29.00	1380+94.00	Center	Removal of Paint		X										109.65	219.30					End of Stage 1
2.0	US 63 NB	1272+35.00	1377+20.00	Left	Removal of Paint	X											104.85	209.70					End of Stage 2
																		429					
Marking Type Removal of Paint:																							
3.0	**US 63 SB**	**1253+72.00**	**1263+72.00**	**Center**	Waterborne/Solvent Paint		X		No										10.00	10.00			Temporary Stage 1
4.0	US 63 SB	1266+85.00	1271+29.00	Center	Waterborne/Solvent Paint		X		No												4.44	4.44	Temporary Stage 1
5.0	US 63 SB	1271+29.00	1380+94.00	Center	Waterborne/Solvent Paint		X		No								109.65	219.30					Temporary Stage 1
6.0	US 63 SB	1271+29.00	1380+94.00	Right	Waterborne/Solvent Paint			X	No										109.65	109.65			Temporary Stage 1
7.0	US 63 SB	1380+94.00	1385+37.00	Center	Waterborne/Solvent Paint		X		No												4.43	4.43	Temporary Stage 1
8.0	US 63 NB	1253+72.00	1272+35.00	Center	Waterborne/Solvent Paint		X		No												18.63	18.63	Temporary Stage 2
9.0	US 63 NB	1272+35.00	1377+20.00	Left	Waterborne/Solvent Paint	X			No										104.85	104.85			Temporary Stage 2
10.0	US 63 NB	1272+35.00	1377+20.00	Center	Waterborne/Solvent Paint		X		No								104.85	209.70					Temporary Stage 2
11.0	US 63 NB	1377+20.00	1385+22.00	Center	Waterborne/Solvent Paint		X		No										8.02	8.02			Temporary Stage 2
12.0	US 63 SB	1387+82.00	1397+20.00	Center	Waterborne/Solvent Paint		X		No										9.38	9.38			Temporary Stage 2
13.0	US 63 NB	1242+55.00	1409+67.00	Left	Waterborne/Solvent Paint	X			Yes	167.12											167.12	167.12	
14.0	US 63 NB	1242+55.00	1409+67.00	Center	Waterborne/Solvent Paint		X		Yes	41.78	167.12	41.78											
15.0	US 63 NB	1242+55.00	1409+67.00	Right	Waterborne/Solvent Paint			X	Yes	167.12									167.12	167.12			
16.0	US 63 SB	1242+55.00	1409+67.00	Left	Waterborne/Solvent Paint	X			Yes	167.12											167.12	167.12	
17.0	US 63 SB	1242+55.00	1409+67.00	Center	Waterborne/Solvent Paint		X		Yes	41.78	167.12	41.78											
18.0	US 63 SB	1242+55.00	1409+67.00	Right	Waterborne/Solvent Paint			X	Yes	167.12									167.12	167.12			
										752.04		83.56						429		576.14		361.74	
Marking Type Waterborne/Solvent Paint:																							
19.0	**US 63 NB**	**1245+92.00**	**1253+72.00**	**Right**	Wet Retroreflective Removable Tape			X	No				7.80	10.37									Temporary Taper Stage 1
20.0	US 63 SB	1263+72.00	1272+35.00	X-Over	Wet Retroreflective Removable Tape				No				8.63	11.48									Temporary Stage 1
21.0	US 63 SB	1263+72.00	1272+35.00	X-Over	Wet Retroreflective Removable Tape				No						8.63	11.48							Temporary Stage 1
22.0	US 63 SB	1380+94.00	1391+02.00	X-Over	Wet Retroreflective Removable Tape				No						10.16	13.51							Temporary Stage 1
23.0	US 63 SB	1380+94.00	1393+52.00	X-Over	Wet Retroreflective Removable Tape				No				12.66	16.84									Temporary Stage 1
24.0	US 63 SB	1385+37.00	1393+17.00	Left	Wet Retroreflective Removable Tape	X			No						7.80	10.37							Temporary Taper Stage 1
25.0	US 63 NB	1245+92.00	1253+72.00	Left	Wet Retroreflective Removable Tape	X			No						7.80	10.37							Temporary Taper Stage 2
26.0	US 63 SB	1262+74.00	1272+35.00	X-Over	Wet Retroreflective Removable Tape				No				9.67	12.86									Temporary Stage 2
27.0	US 63 NB	1263+72.00	1272+35.00	X-Over	Wet Retroreflective Removable Tape				No						8.68	11.54							Temporary Stage 2
28.0	US 63 NB	1377+20.00	1387+82.00	X-Over	Wet Retroreflective Removable Tape				No						10.62	14.12							Temporary Stage 2
29.0	US 63 NB	1377+20.00	1387+82.00	X-Over	Wet Retroreflective Removable Tape				No				10.62	14.12									Temporary Stage 2
30.0	US 63 SB	1397+20.00	1405+00.00	Right	Wet Retroreflective Removable Tape			X	No				7.80	10.37									Temporary Taper Stage 2
														76.04		**71.39**							
Marking Type Wet Retroreflective Removable Tape:																							
Total:										**752.04**		**83.56**		**76.04**		**71.39**		**858**		**576.14**		**361.74**	

Note:
Lane references are in direction of travel.
Bid Items:
PAINTED PAVEMENT MARKINGS, WATERBORNE OR SOLVENT-BASED 1450.4 STA
GROOVES CUT FOR PAVEMENT MARKINGS 752.1 STA

PAVEMENT MARKING LINE TYPES

Line factors based on 6-inch wide continuous line.
*BCY4 - Place on the same side of the roadway to match existing markings near the project.
**NPY4 - Estimating purposes only. No Passing Zone Lines will be located in the field.
***MNY6 - Factor of 1.00 includes number of 6-inch passes to cover median nose area.

BCY4: Broken Centerline (Yellow) @ 0.17
BCY6: Broken Centerline (Yellow) @ 0.25
BLC6: Broken Line Contrast (White/Black) @ 0.50
BLW4: Broken Lane Line (White) @ 0.17
BLW6: Broken Lane Line (White) @ 0.25
CBW6: Crosswalk Bar (White) @ 10.00
CHW8: Channelizing Line (White) @ 1.33
CHW10: Channelizing Line (White) @ 1.67
CHY8: Channelizing Line (Yellow) @ 1.33
CHY10: Channelizing Line (Yellow) @ 1.67
CLW6: Crosswalk Line (White) @ 2.00
DCY4: Double Centerline (Yellow) @ 1.34
DCY6: Double Centerline (Yellow) @ 2.00
DDY4: Double Dotted Line (Yellow) @ 0.44
DDY6: Double Dotted Line (Yellow) @ 0.67
DLW4: Dotted Line (White) @ 0.22
DLW6: Dotted Line (White) @ 0.33
DLY4: Dotted Line (Yellow) @ 0.22
DLY6: Dotted Line (Yellow) @ 0.33
ELW4: Edge Line Right (White) @ 0.67
ELW6: Edge Line Right (White) @ 1.00
ELY4: Edge Line Left (Yellow) @ 0.67
ELY6: Edge Line Left (Yellow) @ 1.00
LDW8: Lane Drop (White) @ 0.33
LDW10: Lane Drop (White) @ 0.42
MNY6: Median Nose (Yellow) @ 1.00
NPY4: No Passing Zone Line (Yellow) @ 0.84
NPY6: No Passing Zone Line (Yellow) @ 1.25
RLW4: Ramp Edge Line Right (White) @ 0.67
RLW6: Ramp Edge Line Right (White) @ 1.00
RLY4: Ramp Edge Line Left (Yellow) @ 0.67
RLY6: Ramp Edge Line Left (Yellow) @ 1.00
SLW2: Stop Line (White) @ 4.00
SLW4: Solid Lane Line (White) @ 0.67
SLW6: Solid Lane Line (White) @ 1.00
SPW4: Sloped Curb 4" (White) @ 2.16
SPW6: Sloped Curb 6" (White) @ 2.28
SPY4: Sloped Curb 4" (Yellow) @ 2.16
SPY6: Sloped Curb 6" (Yellow) @ 2.28
STW6: Standard Curb 6" (Yellow) @ 2.03
STY6: Standard Curb 6" (Yellow) @ 2.03
YLW2: Yield Line (White) @ 1.15

Line No.	Road ID	Station From	Station To	Lane	Marking Type	Left	Center	Right	Groove Marking Needed?	Groove Qty. (STA)	BLW6 (STA)	BLW6 Factored (STA)	CHW8 (STA)	CHW8 Factored (STA)	CHY8 (STA)	CHY8 Factored (STA)	DCY6 (STA)	DCY6 Factored (STA)	ELW6 (STA)	ELW6 Factored (STA)	ELY6 (STA)	ELY6 Factored (STA)	Remarks

REMOVABLE TAPE MARKINGS, WET RETROREFLECTIVE 147.4 STA

PAVEMENT MARKINGS REMOVED 429 STA

TEMPORARY FLOODLIGHTING LUMINAIRES

Possible Standard: LI-130

Line No.	Item No.	Station	Offset (FT)	Number Luminaires	Remarks
1.0	1	1269+49.00	30.0	2	2 per Crossover
2.0	2	1382+62.00	30.0	2	2 per Crossover
Total:				**4**	

Note:
For Offsets, see Article 2528.03 H.2 of the Standard Specifications.
Bid Item:
TEMPORARY FLOODLIGHTING LUMINAIRE 4 EA

PAVEMENT MARKING SYMBOLS AND LEGENDS

Refer to PM-111

Line No.	Roadway Identification	Station	Side	Pavement Symbol	Quantity (EA)	Groove Marking Needed?	Remarks
1.0	US 63	1228+41.95	Right	RLRW	4	No	Temporary Stage 1
2.0	US 63	1419+66.84	Left	LLRW	4	No	Temporary Stage 1
3.0	US 63	1262+42.34	Left	LLRW	4	No	Temporary Stage 2
4.0	US 63	1423+12.01	Right	RLRW	4	No	Temporary Stage 2
Total:					**16**		

Notes:
Lane references are in direction of travel.
Refer to Standard Road Plan TC-61 for layout and details.

Bid Item:
PAINTED SYMBOLS AND LEGENDS, WATERBORNE OR SOLVENT-BASED 16 EA
SYMBOLS AND LEGENDS REMOVED 16 EA

CRASH CUSHIONS

* Bid Item
1. Lane(s) to which the installation is adjacent.
2. Complete this section when using the Temporary Crash Cushion bid item and Earthwork is needed for Sand Barrel placement. Refer to BA-500.

Line No.	Lane	Station	Side	Obstacle Width (FT)	Crash Cushion Type	Crash Cushion Quantity	V (FT) (2)	W (FT) (2)	X (FT) (2)	Y (FT) (2)	Z (FT) (2)	Excavation Class 10* (CY)	Embankment in Place* (CY)	Obstacle Description	Remarks
1.0	NB	1322+79.00	Median	1.9	Temporary Severe Use	1		24.25	5.25	3.25	12.00			Temporary Concrete Barrier	
2.0	NB	1322+79.00	Right	1.9	Temporary Severe Use	1		24.25	5.25	3.25	12.00			Temporary Concrete Barrier	

Bid Item:

TEMP CRASH CUSHION, SEVERE USE (SU) 2 EA

TEMPORARY BARRIER RAIL

Possible Standard: BA-401 Possible Detail: 560-7

* Not a bid item. Anchorage requirements are based on TBR locations shown in the plans. TBR alignments that vary from what is shown in the plans may result in additional TBR sections requiring anchorage.

Line No.	No.	Station From	Station To	Length (FT)	Barrier Rail Type	Anchored*	Modular Glare Screen System	Remarks
1.0		1321+26.00	1322+79.00	150.0	Concrete BA-401	Yes	No	Median
2.0		1321+26.00	1322+79.00	150.0	Concrete BA-401	Yes	No	Outside
Total:				**300**				

Bid Item:
TEMPORARY BARRIER RAIL, CONCRETE 300 LF

108_35
8/15/22

TEMPORARY LANE SEPARATOR SYSTEM

See TC-61

Line No.	Station From	Station To	Length (LF)	Remarks
1.0	1262+22.00	1268+63.00	641.0	Stage 1
2.0	1379+44.00	1385+20.00	747.0	Stage 1
3.0	1266+85.00	1273+84.00	705.0	Stage 2
4.0	1375+70.00	1385+20.00	950.0	Stage 2
Total:			**3043**	

Bid Item:
TEMPORARY LANE SEPARATOR SYSTEM 3043 LF

REMOVAL OF PAVEMENT

Refer to Tabulation 102-5.

* Not a bid item.

Line No.	Station From	Station To	Side	Pavement Type	Width (FT)	Area (SY)	Saw Cut* (LF)	Remarks
1.0	1294+00.00	1297+00.00	NB	PCC	34.0	1133.3	68.0	
2.0	1294+00.00	1297+00.00	SB	PCC	34.0	1133.3	68.0	
3.0	1316+50.00	1320+50.71	NB	PCC	34.0	1513.8	68.0	Start Bridge Omission
4.0	1321+18.50	1323+50.00	NB	PCC	34.0	874.6	68.0	End Bridge Omission
5.0	1316+50.00	1323+50.00	SB	PCC	34.0	2644.4	68.0	
6.0	1328+00.00	1339+00.00	NB	PCC	34.0	4155.6	68.0	
7.0	1328+00.00	1339+00.00	SB	PCC	34.0	4155.6	68.0	
8.0	1342+00.00	1345+00.00	NB	PCC	34.0	1133.3	68.0	
9.0	1342+00.00	1345+00.00	SB	PCC	34.0	1133.3	68.0	
10.0	1353+50.00	1355+00.00	NB	PCC	34.0	566.7	68.0	
11.0	1353+50.00	1355+00.00	SB	PCC	34.0	566.7	68.0	
Total:						**19010.6**	**748**	

Note:
Removal includes bridge approach pavement and shoulders.
Bid Item:
REMOVAL OF PAVEMENT 19,010.6 SY

110_07A
8/15/22

REMOVAL OF STEEL BEAM GUARDRAIL

(1) Lane(s) to which the installation is adjacent.
(2) Includes length of End Terminals and End Anchors.

Line No.	No.	Direction of Traffic (1)	Station From	Station To	Side	Removal of Guardrail (2) (LF)
1.0		NB	1390+17.50	1319+80.00	Median	62.5
2.0		NB	1390+17.50	1319+80.00	Right	62.5
Total:						**125**

Bid Item:
REMOVAL OF STEEL BEAM GUARDRAIL 125 LF

DELIVERY AND STOCKPILING

Line No.	Item Description	Quantity	Quantity Units	Delivery Location	Contact Name	Contact Number	Remarks
1.0	Steel Beam Guardrail	125	LF	IADOT Oskaloosa Garage	Mike "Walt" Kingery	641-218-9422	

Note:
Includes all existing guardrail components removed from the jobsite.

Deliver to:
IADOT Oskaloosa Maintenance Garage, 1970 IA 92, Oskaloosa, IA 52577

Bid Item:
DELIVER AND STOCKPILE SALVAGED MATERIALS 1 LS

UTILITIES

Line No.	Company	Contact	Phone	Email
1.0	Aureon Technology	Jeff Klocko	515-240-2644	jeff.klocko@aureon.com
2.0	Lumen/CenturyLink	Steve Parker	507-358-1978	CTL-RDMV-IA@lumen.com
3.0	Mahaska Rural Water	Randy Pleima	641-660-0332	h2opleima@mahaska.org
4.0	Mid American Energy	Matt Novy	515-242-4224	Matthew.Novy@midamerican.com
5.0	Windstream CLEC	Kelly Wingfield	515-559-4031	kelly.wingfield@windstream.com

BRIDGE APPROACH SECTION

Refer to the BR Series.

* Not a bid item

Line No.	Bridge Station	End	Skew Ahead Left (Degrees)	Skew Ahead Right (Degrees)	(T) Thickness (IN)	Pay Length (FT)	Non-Reinf. Area (SY)	Single-Reinf. Area (SY)	Double-Reinf. Area (SY)	SRP Approach	SRP Abutment Type	SRP Abutting Pavement	Perforated * 4" Subdrain (LF)	Subdrain * Outlet (STA)	Subdrain * Outlet Side	Porous * Backfill (CY)	Class 'A' * Crushed Stone Backfill (CY)	Modified * Subbase (TON)	Polymer * Grid (SY)	Special * Backfill (TON)	Remarks
1.0	1320+84.61	S			12.0	70.0			335.6				55.0	1319+90.41	Right	2.0		316.800	336.0		
2.0	1320+84.61	N			12.0	70.0			335.6				55.0	1321+78.80	Right	2.0		316.800	336.0		
Total:									**671.2**				**110**			**4**		**633.6**	**672**		

Note:
See Modified Standard Road Plans BR-204 and BR-211 on the U Sheets for details.
Bid Item:
BRIDGE APPROACH, BR-204 671.2 SY

SHOULDERS

(1) Lane(s) to which the shoulder is adjacent.
(2) See Typ. 7156, 7157, or 7158.
(3) Bid Item.
(4) Applies only for Paved Shoulders constructed on project with existing granular shoulders.
(5) Bid Item. Typ. 7156, 7157, or 7158.
(6) Does not include shrink.
(7) Paved shoulder thickness specified in Remarks.
(8) Subbase type specified in Remarks.

Roadway Identification	Direction of Travel (1)	Station From	Station To	Side	P Width (FT)	P SG Width (2) (FT)	G Width (FT)	L Length (FT)	Class 13 Excavation (CY)(3)(4)	HMA (TON)	HMA (TON/STA)	Binder (TONS)	Paved Shoulder (3) (SY)	Shoulder at Grdrail (5)(7)	Special Backfill HMA Alt. (3) (TON)	Special Backfill HMA Alt. (TON/STA)	Special Backfill PCC Alt. (3) (TON)	Special Backfill PCC Alt. (TON/STA)	Polymer Grid (SY)	Subbase (3) (8) (CY)	Granular Shoulder (3) (TON)	Granular Shoulder (TON/STA)	Shoulder Const. Alt (3) (STA)	Shoulder Const. Alt HMA (6) (CY)	Shoulder Const. Alt PCC (6) (CY)	Remarks
US 63 NB/SB		1294+00.00	1297+00.00	Median				600.00															6.00		278.67	
US 63 NB/SB		1294+00.00	1297+00.00	Right				600.00															6.00		139.33	
US 63 NB		1316+50.00	1318+97.00	Median				247.00															2.47		229.44	
US 63 NB		1316+50.00	1318+97.00	Right				247.00															2.47		229.44	
US 63 NB		1318+97.00	1319+80.41	Median		4		83.41						27.8						13.10			0.83		50.97	12" PCC
US 63 NB		1318+97.00	1319+80.41	Right		4		83.41						27.8						13.10			0.83		35.99	12" PCC
US 63 SB		1316+50.00	1323+50.00	Median				700.00															7.00		650.22	
US 63 SB		1316+50.00	1323+50.00	Right				700.00															7.00		325.11	
US 63 NB		1321+88.80	1323+50.00	Median				161.20															1.61		149.74	
US 63 NB		1321+88.80	1323+50.00	Right				161.20															1.61		149.74	
US 63 NB/SB		1328+00.00	1339+00.00	Median				2200.00															22.00		1021.78	
US 63 NB/SB		1328+00.00	1339+00.00	Right				2200.00															22.00		510.89	
US 63 NB/SB		1342+00.00	1345+00.00	Median				600.00															6.00		278.67	
US 63 NB/SB		1342+00.00	1345+00.00	Right				600.00															6.00		139.33	
US 63 NB/SB		1353+50.00	1355+00.00	Median				300.00															3.00		139.33	
US 63 NB/SB		1353+50.00	1355+00.00	Right				300.00															3.00		69.67	
Total:														**55.6**						**26.2**			**97.82**		**4398.32**	

Note:
PCC shoulders are included in the mainline pavement bid item. See Tab. 100-24.
Bid Items:
PAVED SHOULDER, P.C. CONCRETE, 12 IN. 55.6 SY (Shoulder at Guardrail)
MODIFIED SUBBASE 26.2 CY (Shoulder at Guardrail)
SHOULDER CONSTRUCTION, EARTH 97.8 STA

MILLED RUMBLE STRIPS

* Calculated at 18" width for Shoulder.
** For use with penetrating Engineered Fog Seal. Calculated at 2" wider than rumble strips.

Line No.	Road Identification	Station From	Station To	Shoulder Pavement Type	Rumble Strip Lane	Rumble Strip Type	Fog Seal Type	L (IN)	PCC Length (STA)	HMA Length (STA)	Fog Seal* Shoulder (GAL)	Fog Seal (SY)**	Effective Shoulder Width PCC (FT)	Effective Shoulder Width HMA (FT)	Effective Shoulder Width Granular\Earth (FT)	Remarks
1.0	US 63 NB/SB	1294+00.00	1297+00.00	PCC	Left Shoulder	Milled		12"	6.00				6.0			
2.0	US 63 NB/SB	1294+00.00	1297+00.00	PCC	Right Shoulder	Milled		12"	6.00				10.0			
3.0	US 63 NB	1316+50.00	1319+80.41	PCC	Left Shoulder	Milled		12"	3.30				6.0			End at Bridge Approach Pavement
4.0	US 63 NB	1316+50.00	1319+80.41	PCC	Right Shoulder	Milled		12"	3.30				10.0			End at Bridge Approach Pavement
5.0	US 63 SB	1316+50.00	1323+50.00	PCC	Left Shoulder	Milled		12"	7.00				6.0			
6.0	US 63 SB	1316+50.00	1323+50.00	PCC	Right Shoulder	Milled		12"	7.00				10.0			
7.0	US 63 NB	1321+88.80	1323+50.00	PCC	Left Shoulder	Milled		12"	1.61				6.0			Begin from Bridge Approach Pavement
8.0	US 63 NB	1321+88.80	1323+50.00	PCC	Right Shoulder	Milled		12"	1.61				10.0			Begin from Bridge Approach Pavement
9.0	US 63 NB/SB	1328+50.00	1339+00.00	PCC	Left Shoulder	Milled		12"	21.00				6.0			
10.0	US 63 NB/SB	1328+50.00	1339+00.00	PCC	Right Shoulder	Milled		12"	21.00				10.0			
11.0	US 63 NB/SB	1342+00.00	1345+00.00	PCC	Left Shoulder	Milled		12"	6.00				6.0			
12.0	US 63 NB/SB	1342+00.00	1345+00.00	PCC	Right Shoulder	Milled		12"	6.00				10.0			
13.0	US 63 NB/SB	1353+50.00	1355+00.00	PCC	Left Shoulder	Milled		12"	3.00				6.0			
14.0	US 63 NB/SB	1353+50.00	1355+00.00	PCC	Right Shoulder	Milled		12"	3.00				10.0			
Total:									**95.82**							

Notes:
Lane references are in the direction of travel.
Refer to Standard Road Plan PV-12 for details.

Bid Items:
MILLED SHOULDER RUMBLE STRIPS, PCC SURFACE 95.8 STA

262_06
9/28/22

UTILITIES (NOT A POINT 25 PROJECT)

This is NOT a POINT 25 project and is not subject to the provisions of IAC 761-115.25.

104_09A
5/6/24

LONGITUDINAL SUBDRAIN SHOULDER

* Not a bid item.

Line No.	Road or Lane Identification	Station From	Station To	Side	Depth (IN) (D)	Subdrain Size (IN)	Length (FT)	Outlet Station	Outlet Type	Porous Backfill* (CY)	Remarks
1.0	US 63 SBL	1294+00.00	1294+00.00	Left	42.0	4.0	30.0	1294+00.00	DR-306	2.8	CUT INTO EXISTING DRAIN AND INSTALL NEW OUTLET
2.0	US 63 SBL	1294+00.00	1297+00.00	Left	42.0	4.0	330.0	1294+00.00	DR-306	30.6	
3.0	US 63 SBL			Left	42.0	4.0	30.0	1297+00.00	DR-306	2.8	
4.0	US 63 SBL	1316+50.00	1316+50.00	Left	42.0	4.0	30.0	1316+50.00	DR-306	2.8	CUT INTO EXISTING DRAIN AND INSTALL NEW OUTLET
5.0	US 63 SBL	1316+50.00	1323+50.00	Left	42.0	4.0	730.0	1316+50.00	DR-306	67.6	
6.0	US 63 SBL			Left	42.0	4.0	30.0	1323+50.00	DR-306	2.8	
7.0	US 63 SBL	1323+50.00	1323+50.00	Left	42.0	4.0	30.0	1323+50.00	DR-306	2.8	CUT INTO EXISTING DRAIN AND INSTALL NEW OUTLET
8.0	US 63 SBL	1328+00.00	1328+00.00	Left	42.0	4.0	30.0	1328+00.00	DR-306	2.8	CUT INTO EXISTING DRAIN AND INSTALL CAP
9.0	US 63 SBL	1328+30.00	1333+00.00	Left	42.0	4.0	500.0	1328+30.00	DR-306	46.3	
10.0	US 63 SBL			Left	42.0	4.0	30.0	1333+00.00	DR-306	2.8	
11.0	US 63 SBL	1333+00.00	1339+00.00	Left	42.0	4.0	630.0	1333+00.00	DR-306	58.3	
12.0	US 63 SBL			Left	42.0	4.0	30.0	1339+00.00	DR-306	2.8	
13.0	US 63 SBL	1339+00.00	1339+00.00	Left	42.0	4.0	30.0	1339+00.00	DR-306	2.8	CUT INTO EXISTING DRAIN AND INSTALL NEW OUTLET
14.0	US 63 SBL	1342+00.00	1342+00.00	Left	42.0	4.0	30.0	1342+00.00	DR-306	2.8	CUT INTO EXISTING DRAIN AND INSTALL NEW OUTLET
15.0	US 63 SBL	1342+00.00	1345+00.00	Left	42.0	4.0	330.0	1342+00.00	DR-306	30.6	
16.0	US 63 SBL			Left	42.0	4.0	30.0	1345+00.00	DR-306	2.8	
17.0	US 63 SBL	1353+55.00	1355+00.00	Left	42.0	4.0	175.0	1353+55.00	DR-306	16.2	
18.0	US 63 SBL			Left	42.0	4.0	30.0	1355+00.00	DR-306	2.8	
19.0	US 63 SBL	1355+00.00	1355+00.00	Left	42.0	4.0	30.0	1355+00.00	DR-306	2.8	CUT INTO EXISTING DRAIN AND INSTALL NEW OUTLET
20.0	US 63 NBL	1294+00.00	1294+00.00	Right	42.0	4.0	30.0	1294+00.00	DR-306	2.8	CUT INTO EXISTING DRAIN AND INSTALL NEW OUTLET
21.0	US 63 NBL	1294+00.00	1297+00.00	Right	42.0	4.0	330.0	1294+00.00	DR-306	30.6	
22.0	US 63 NBL			Right	42.0	4.0	30.0	1297+00.00	DR-306	2.8	
23.0	US 63 NBL	1297+00.00	1297+00.00	Right	42.0	4.0	30.0	1297+00.00	DR-306	2.8	CUT INTO EXISTING DRAIN AND INSTALL NEW OUTLET
24.0	US 63 NBL	1316+50.00	1319+80.00	Right	42.0	4.0	360.0	1316+50.00	DR-306	33.3	
25.0	US 63 NBL			Right	42.0	4.0	30.0	1319+80.00	DR-306	2.8	
26.0	US 63 NBL	1321+88.00	1323+50.00	Right	42.0	4.0	192.0	1321+88.00	DR-306	17.8	
27.0	US 63 NBL			Right	42.0	4.0	30.0	1323+50.00	DR-306	2.8	
28.0	US 63 NBL	1328+20.00	1333+00.00	Right	42.0	4.0	510.0	1328+20.00	DR-306	47.2	
29.0	US 63 NBL			Right	42.0	4.0	30.0	1333+00.00	DR-306	2.8	
30.0	US 63 NBL	1333+00.00	1339+00.00	Right	42.0	4.0	630.0	1333+00.00	DR-306	58.3	
31.0	US 63 NBL			Right	42.0	4.0	30.0	1339+00.00	DR-306	2.8	
32.0	US 63 NBL	1342+00.00	1345+00.00	Right	42.0	4.0	330.0	1342+00.00	DR-306	30.6	
33.0	US 63 NBL			Right	42.0	4.0	30.0	1345+00.00	DR-306	2.8	
34.0	US 63 NBL	1353+55.00	1355+00.00	Right	42.0	4.0	175.0	1353+55.00	DR-306	16.2	
35.0	US 63 NBL			Right	42.0	4.0	30.0	1355+00.00	DR-306	2.8	
Total:							5882		DR-306=35	545.2	

NOTE: ALL LONGITUDINAL SUBDRAINS ARE TYPE 9 UNLESS OTHERWISE NOTED IN REMARKS COLUMN.

NOTE: ALL LONGITUDINAL SUBDRAINS MAY BE ADJUSTED BOTH VERTICALLY AND HORIZONTALLY IN THE FIELD AS NECESSARY.

GEOTECHNICAL DESIGN

LICENSED PROFESSIONAL ENGINEER
Mark A. Dell
21208
IOWA

I hereby certify that this engineering document was prepared by me or under my direct personal supervision and that I am a duly licensed Professional Engineer under the laws of the State of Iowa.

Signature: Mark A. Dell — Date: 3/18/26

Mark A. Dell
Printed or Typed Name

My license renewal date is December 31, 20 27

Pages or sheets covered by this seal: CS.1-CS.2

REMOVAL OF EXISTING LONGITUDINAL SUBDRAINS WHEN EXISTING PAVEMENT IS REMOVED

See Tab 104-9 for tabulation of longitudinal subdrains

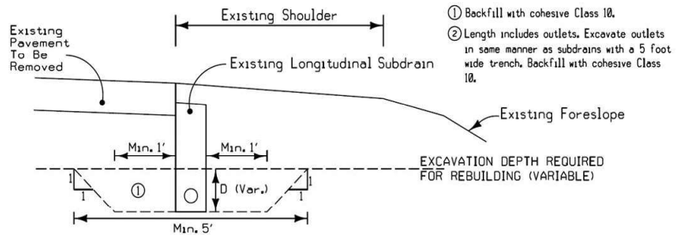

* Not a bid item

Line No.	Roadway Identification	Station From	Station To	Side	Length (2) (LF)	Depth (D) (FT)	Excavation Quantity* (CY)	Remarks
1.0	US 63 SBL	1294+00.00	1297+00.00	Left	325.0	1.5	30.07	CUT EXISTING, NEW OUTLET AT 1294+00
2.0	US 63 SBL	1316+50.00	1317+00.00	Left	60.0	1.5	5.54	CUT EXISTING, NEW OUTLET AT 1316+50
3.0	US 63 SBL	1317+00.00	1322+00.00	Left	550.0	1.5	50.91	
4.0	US 63 SBL	1322+00.00	1323+50.00	Left	175.0	1.5	16.19	CUT EXISTING, NEW OUTLET AT 1323+50
5.0	US 63 SBL	1328+00.00	1331+00.00	Left	325.0	1.5	30.07	CUT EXISTING, CAP AT 1328+00
6.0	US 63 SBL	1331+00.00	1336+00.00	Left	550.0	1.5	50.91	
7.0	US 63 SBL	1336+00.00	1339+00.00	Left	325.0	1.5	30.07	CUT EXISTING, NEW OUTLET AT 1339+00
8.0	US 63 SBL	1342+00.00	1345+00.00	Left	425.0	1.5	39.33	CUT EXISTING, NEW OUTLET AT 1342+00
9.0	US 63 SBL	1353+55.00	1355+00.00	Left	170.0	1.5	15.72	CUT EXISTING, NEW OUTLET AT AT 1355+00
10.0	US 63 NBL	1294+00.00	1297+00.00	Right	370.0	1.5	54.81	CUT EXISTING, NEW OUTLET AT 1294+00 AND 1297+00
					3275		**323.62**	

NOTE 1: *(INCIDENTAL, NOT A BID ITEM): IF ADDITIONAL GRANULAR MATERIAL IS ENCOUNTERED AT THE REQUIRED DEPTH OF EXCAVATION, THEN EXCAVATE DEEPER UNTIL ALL GRANULAR MATERIAL IS REMOVED.

SURVEY SYMBOLS

- Interstate Highway Symbol
- U.S. Highway Symbol
- Iowa Highway Symbol
- County Road Highway Symbol
- Evergreen Tree
- Deciduous Tree
- Fruit Tree
- SB Shrub (Bushes)
- Timber
- Hedge
- Stump
- Swamp
- Rock Outcrop
- Broken Concrete
- Revetment (Rip Rap)
- Cemetery
- G Grave
- CV Cave
- SH Sink Hole
- Board Fence
- Chain Link or Security Fence
- Wire Fence
- Terrace
- Earth Dam or Dike (Existing)
- Tile Outlet
- Edge of Water
- Existing Drainage
- Right of Way Rail or Lot Corner
- Concrete Monument
- Well
- Windmill
- Beehive Intake
- Existing Intake
- Existing Utility Access (Manhole)
- Fire Hydrant
- WH Water Hydrant (Rural)
- ST Septic Tank
- C Cistern
- LP L.P. Gas Tank (No Footing)
- UST Underground Storage Tank
- Latrine
- Satellite TV Dish
- WHU Water Hook Up
- RT Radio Tower
- TA Tower Anchor
- Guardrail (Beam or Cable)
- GP Guard Post (one or two)
- Guard Post (over two)
- FP Filler Pipe
- GV Gas Valve
- WV Water Valve
- SL Speed Limit Sign
- MM Mile Marker Post
- SIGN Sign
- TCB Traffic Signal Control Box
- RRB Rail Road Signal Control Box
- TSB Telephone Switch Box
- EB Electric Box

UTILITY LEGEND

See Tab. 111-26 for Utility Contact Information

PLAN VIEW COLOR LEGEND OF PLAN AND PROFILE SHEETS

LINEWORK	Design Color No.		
Green	(2)		Existing Topographic Features and Labels
Blue	(1)		Proposed Alignment, Stationing, Tic Marks, and Alignment Annotation
Magenta	(5)		Existing Utilities

SHADING	Design Color No.			Transparency
Pink, Dark	(13)		Temporary Pavement Shading	50%
Yellow	(4)		Proposed Pavement Shading	50%
Orange	(6)		Proposed Granular Shading	50%
Orange	(70)		Proposed Shoulder Granular Shading	50%
Yellow	(68)		Proposed Shoulder Paved Full Depth Shading	50%
Yellow	(132)		Proposed Shoulder Paved Partial Depth Shading	50%
Brown, Light	(236)		Grading Shading	50%
Orange, Light	(134)		Proposed Granular Entrance Shading	50%
Yellow	(220)		Proposed Paved Entrance Shading	50%
Tan	(8)		Proposed Sidewalk Shading	50%
Blue, Light	(230)		Proposed Sidewalk Landing Shading	50%
Pink	(11)		Proposed Sidewalk Ramp Shading	50%
Red	(3)		Proposed Structure Shading	50%
Red	(3)		Delineates Restricted Areas	0%

PROFILE VIEW COLOR LEGEND OF PLAN AND PROFILE SHEETS

LINEWORK	Design Color No.		
Green	(10)		Existing Ground Line Profile
Blue	(1)		Proposed Profile and Annotation
Magenta	(5)		Existing Utilities
Blue, Light	(230)		Proposed Ditch Grades, Left
Black	(0)		Proposed Ditch Grades, Median
Rust	(14)		Proposed Ditch Grades, Right

- Reference Point — Station — Survey Line
- Section Corner
- Ground Line Intercept
- Saw Cut
- Guardrail
- Trench Drain
- HighTension Cable Guardrail
- Sheet Pile
- Pavement Removal
- Clearing & Grubbing Area

RIGHT-OF-WAY LEGEND

- Proposed Right-of-Way Symbol
- Proposed Right-of-Way Line
- Existing Right of Way
- Existing and Proposed Right-of-Way
- Easement and Existing Right-of-Way
- Easement (Temporary) Symbol
- Easement (Temporary) Line
- Easement
- C/A Access Control
- Property Line Symbol
- Property Line

PLAN AND PROFILE LEGEND AND SYMBOL INFORMATION SHEET

(COVERS SHEET SERIES D, E, F, & K)

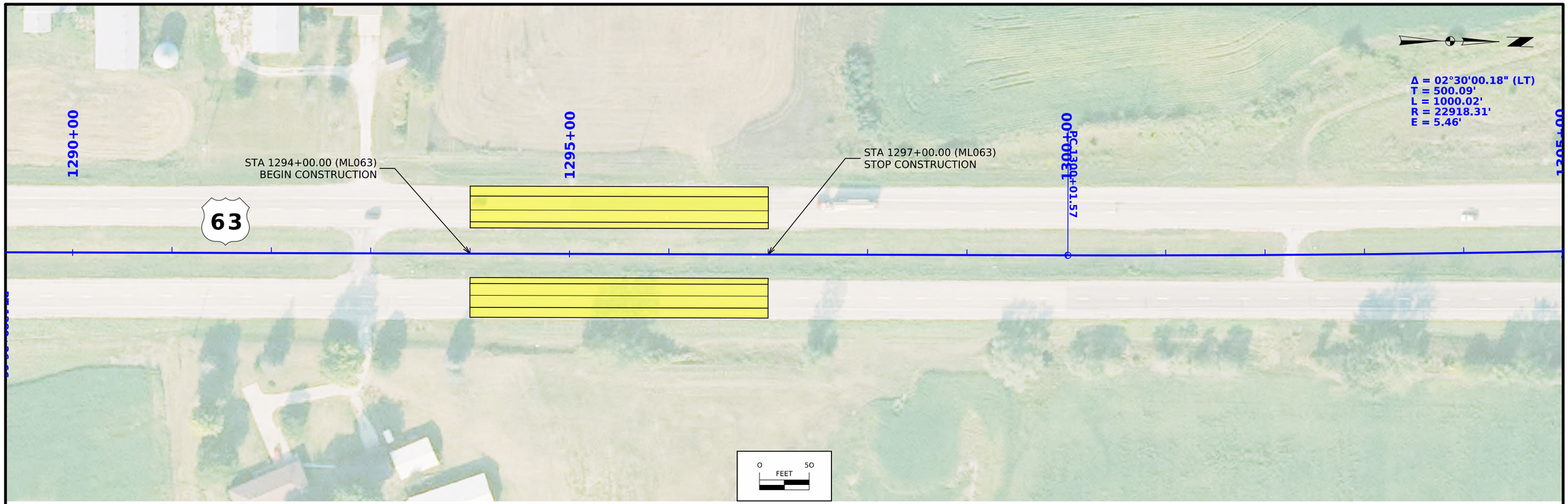

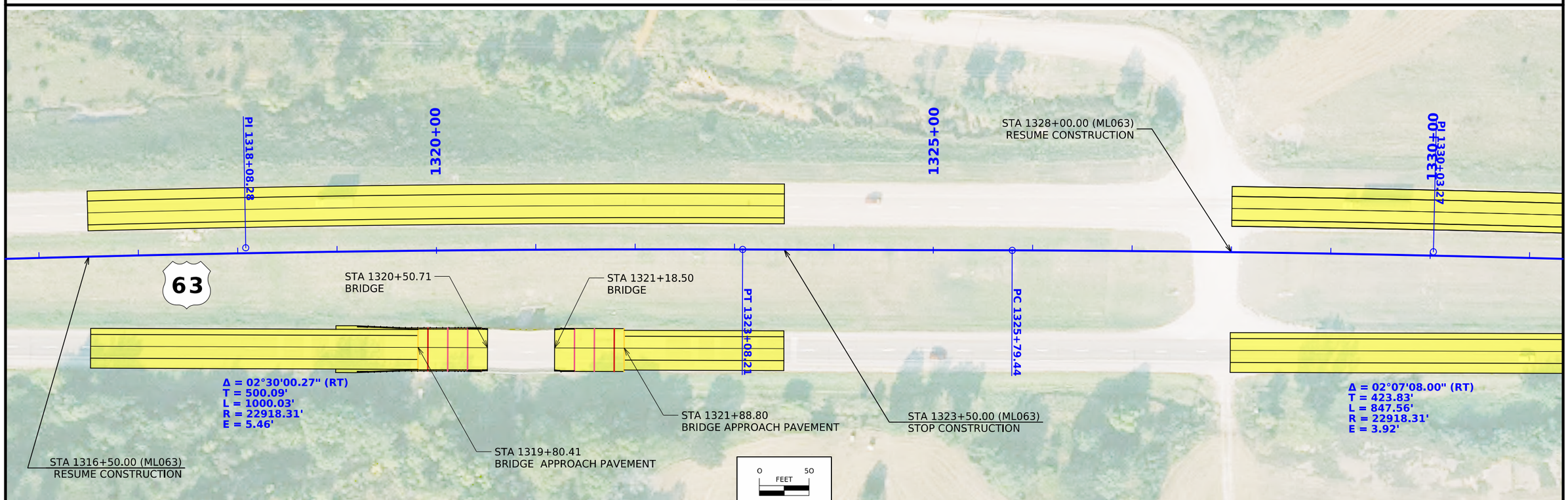

FILE NO.	ENGLISH	DESIGN TEAM Miller/Koch	Mahaska COUNTY	PROJECT NUMBER NHSX-063-3(108)--3H-62	SHEET NUMBER D.2

1:37:53 PM 4/1/2026 jkoch pw:\\NTPwint1.dot.int.lan:PWMain\Documents\Projects\6206301025\Design\NHSX-063-3(108)--3H-62\CADD_Files\Sheet_Files\SHT_62063108_D02.dgn

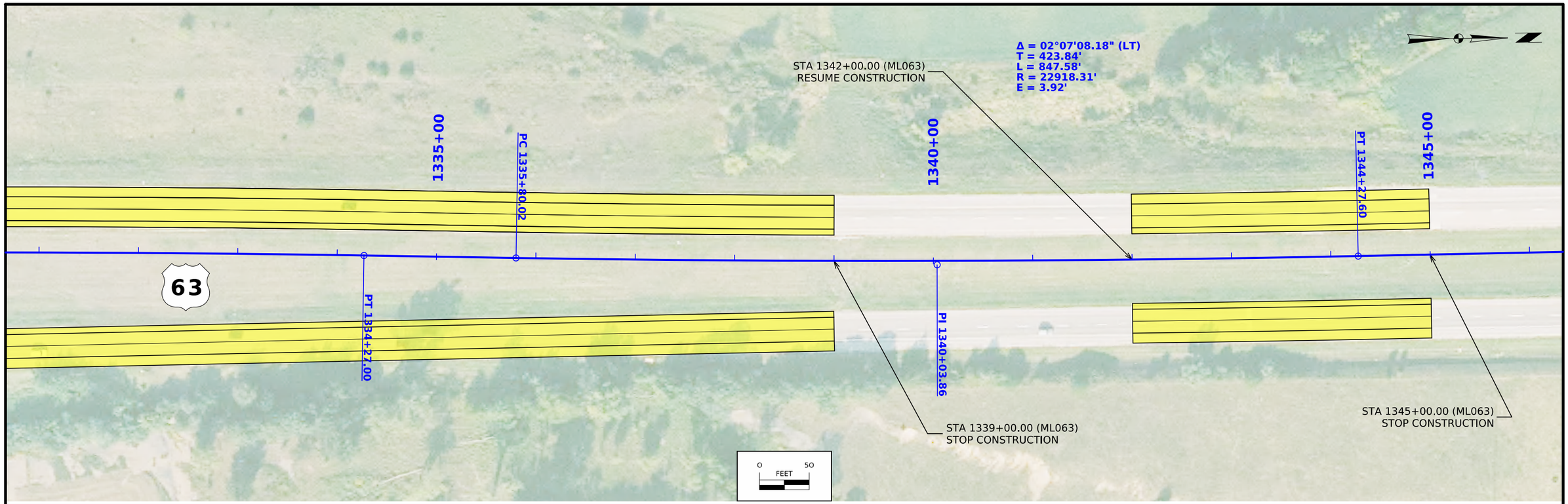

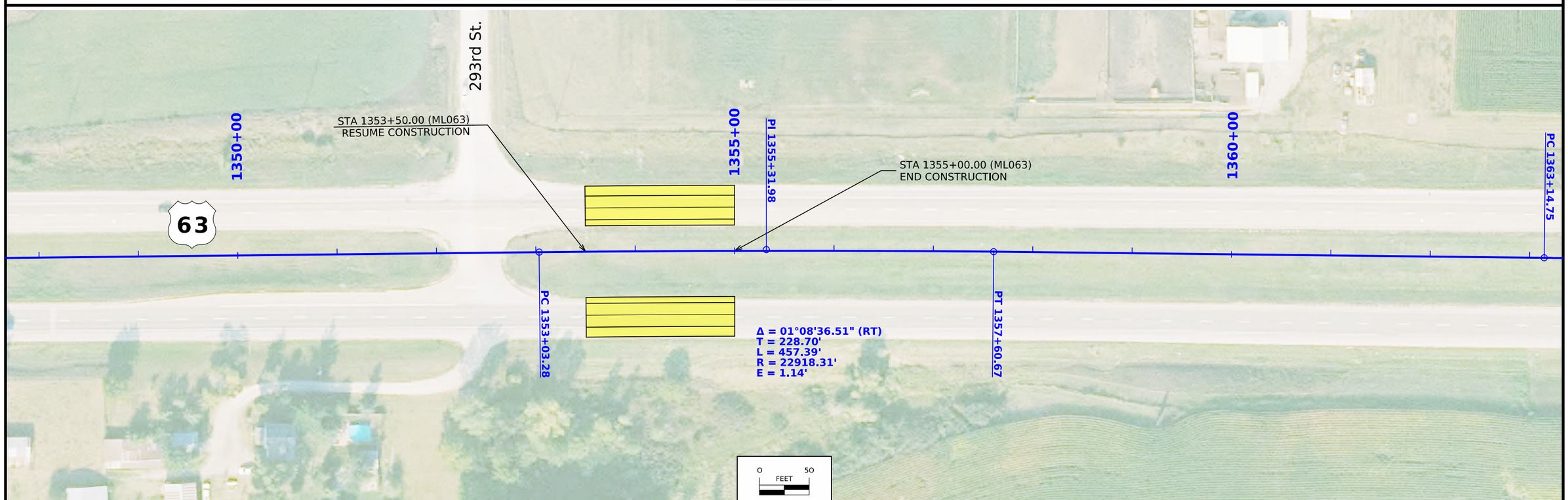

FILE NO.	ENGLISH	DESIGN TEAM Miller/Koch	Mahaska COUNTY	PROJECT NUMBER NHSX-063-3(108)--3H-62	SHEET NUMBER D.3

11:29:34 AM 3/30/2026 jkoch pw:\\NTPwint1.dot.int.lan:PWMain\Documents\Projects\6206301025\Design\NHSX-063-3(108)--3H-62\CADD_Files\Sheet_Files\SHT_62063108_D02.dgn

SURVEY INDEX

County : Mahaska
Project Code : 25-62-063-010
Phase Number : NHSX-063-3(108)--3H-62
Location : N of Co Rd G63 to S of 293rd St - Various Locations
Work Code : 1012-PCC Pavement - Replace
Project Directory : 6206301025

Survey Personnel

Clayton Henningsen – Survey Party Chief
Jason Arn – Survey Party Chief

Date(s) of Survey

Begin Date	03/12/2025
End Date	03/31/2025

General Information

This survey is for US Hwy 63 at locations N of Co Rd G63 to S of 293rd St. This survey request was for the US Hwy 63 corridor only. This project is a Full Field DTM survey.

Utility Information

For logging data and other utility details see Utility Survey and Ownership Report in the Utility folder of the PrelimSurvey project directory.

Project Control

Coordinates were determined for primary project control points by conducting concurrent six-hour static observations. Post processing is constrained to nearby Iowa Real Time Network reference stations. For additional details of the control survey, contact the Preliminary Survey department.

PROJECT DATUM: NAD83(2011) for EPOCH 2010.00 (IaRTN 2019 ADJUSTMENT)
COORDINATE SYSTEM: IOWA REGIONAL COORDINATE SYSTEM ZONE 09 (U.S. SURVEY FOOT)
VERTICAL DATUM: NAVD88
GEOID MODEL: 2018u3

Alignment Information

The horizontal alignments for U.S. Hwy 63 this survey is a retrace of PCC Plans No. NHS-137-3(19)—19-62. Survey stationing for SURMLA063 was equated to the plan POT at Sta. 1259+79.36 and carried ahead without equation throughout the south survey area. Survey stationing for SURMLB063 was equated to the plan POT at Sta. 1367+49.54 and carried ahead without equation throughout the south survey area. All points provided by district survey 5.

Survey stationing relates to as built plan stationing as follows:

SURMLA063
POT Sta. 1259+79.36 PCC Plans No. NHS-137-3(19)—19-62
Survey POT Sta. 1259+79.36

PC Sta. 1268+69.09 PCC Plans No. NHS-137-3(19)—19-62
Survey PC Sta. 1268+69.10

PT Sta. 1275+56.82 PCC Plans No. NHS-137-3(19)—19-62
Survey PT Sta. 1275+56.80

SURMLB063
POT Sta. 1367+49.54 PCC Plans No. NHS-137-3(19)—19-62
Survey POT Sta. 1367+49.54

POT Sta. 1401+05.21 PCC Plans No. NHS-137-3(19)—19-62
Survey POT Sta. 1401+05.13

CONTROL POINT VICINITY MAP

This map is a guide to the vicinity of the primary project control points. Primary control is for use with RTK base stations and for RTN validation. Future surveys will use primary project control to establish temporary control as needed for construction or other surveying applications.

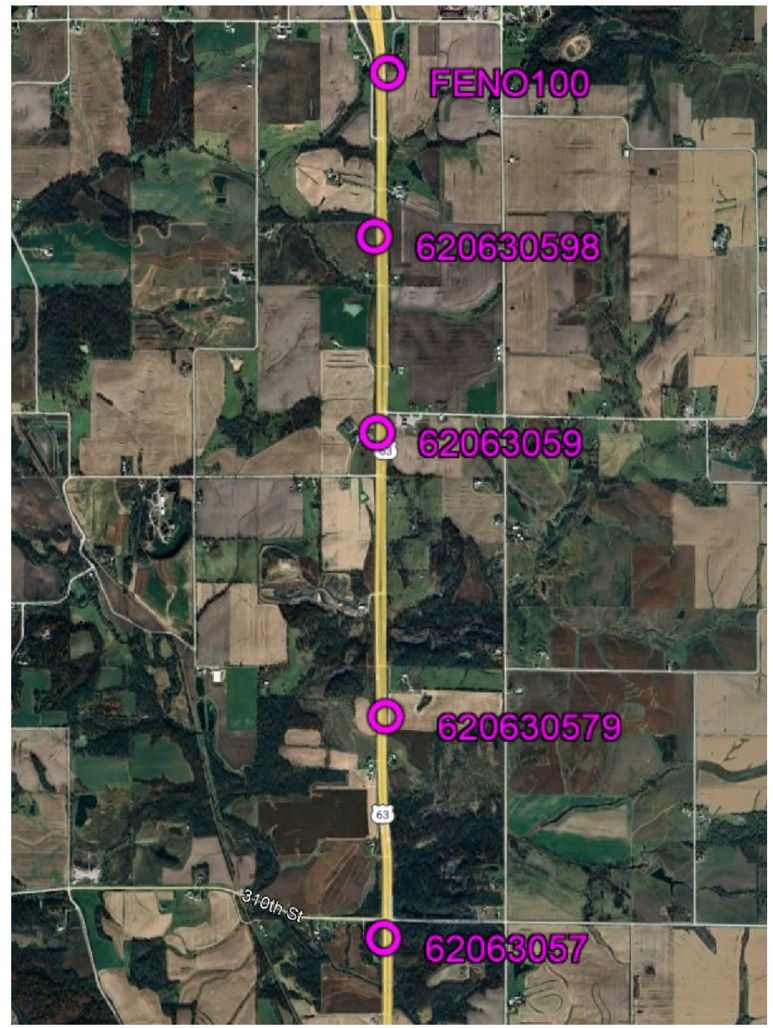

HORIZ. DATUM: NAD83(2011) for EPOCH 2010.00 (IaRTN 2019 Adjustment) - Iowa RCS Zone 09 (U.S. Survey Foot)

VERT. DATUM: NAVD88 - Geoid Model: 2018u3

Coordinate listing from next sheet will be used with IaRTN for monument recovery. No other reference ties are given.

HORIZONTAL AND VERTICAL PROJECT CONTROL COORDINATE LISTING
HORIZ. DATUM: NAD83(2011) for EPOCH 2010.00 (IaRTN 2019 Adjustment)
Ia. Regional Coordinate System Zone 09 (U.S. Survey Foot)
VERT. DATUM: NAVD88
Geoid Model: 2018u3

Point Name	Northing	Easting	Elevation	Feature Definition-Description
62063057	7547586.96	19548513.50	711.02	CP FENO MONUMENT
62063059	7558123.89	19548300.42	810.44	CP FENO MONUMENT
620630579	7552217.27	19548517.30	765.55	CP FENO MONUMENT
620630598	7562204.58	19548275.97	813.02	CP FENO MONUMENT
FENO100	7565613.06	19548466.78	816.87	CP FENO MONUMENT

108_23A
8/15/22

TRAFFIC CONTROL PLAN

Traffic control will be completed in two stages utilizing existing median crossovers per Standard Road Plan TC-61.

The crossovers will be left in place at the completion of this project.

511 TRAVEL RESTRICTIONS

Line No.	Route	Direction	County	Location Description	Feature Crossed	Object Type	Maint. Bridge No. or Structure ID or FHWA No.	Type of Restriction	Existing Measurement	Construction Measurement	Construction Measurement as Signed	Projected As Built Measurement	Remarks
								None					

No Restrictions Expected.

108_26A
8/15/22

STAGING NOTES

1. Stage 1 will consist of the closure and construction of the northbound lanes.
   a. Traffic will utilize the median crossovers to maintain two lane, two way traffic on the southbound lanes.
   b. During Stage 1 construction, it will be necessary to place temporary concrete barrier and crash cushions on the trailing corners of the northbound bridge to accommodate the two lane, two way traffic in Stage 2.

2. Stage 2 will consist of the closure and construction of the southbound lanes.
   a. Traffic will utilize the median crossovers to maintain two lane, two way traffic on the northbound lanes.

CROSS SECTION VIEW COLOR LEGEND OF TRAFFIC CONTROL AND STAGING SHEETS

SHADING	Design Color No.	
Green, Light	(225)	Existing Pavement Shading
Gray, Light	(48)	Previously Constructed Pavement Shading
Gray, Med	(80)	Previously Constructed Granular Surface Shading
Blue, Light	(230)	Proposed Pavement Shading
Lavender	(9)	Temporary Pavement Shading
Brown, Med	(237)	Future Proposed Pavement Shading

CROSS SECTION VIEW PATTERN AND SYMBOL LEGEND OF TRAFFIC CONTROL AND STAGING SHEETS

Pavement Removal	Proposed Granular Shoulder
Proposed Granular Subbase	Temporary Shoulder
Proposed Special Backfill	Existing Shoulder Strengthening
Temporary Barrier Rail	Permanent Barrier Rail
	Channelizing Device

PLAN VIEW COLOR LEGEND OF TRAFFIC CONTROL AND STAGING SHEETS

LINEWORK	Design Color No.	
Green	(2)	Existing Topographic Features and Labels
Magenta	(5)	Pavement Marking Call Outs
Blue	(1)	Proposed Alignment, Stationing, Tic Marks, and Alignment Annotation
Yellow	(4)	Pavement Markings, Yellow
Off White	(254)	Pavement Markings, White
Violet	(15)	Temporary barrier rail, Unpinned
Flush Orange	(228)	Temporary barrier rail, Pinned

SHADING	Design Color No.	
Green, Light	(225)	Existing Pavement Shading
Gray, Light	(48)	Previously Constructed Pavement Shading
Orange	(6)	Proposed Granular Surface Shading
Gray, Med	(80)	Previously Constructed Granular Surface Shading
Blue, Light	(230)	Proposed Pavement Shading
Pink, Dark	(13)	Temporary Pavement Shading
Brown, Light	(236)	Proposed Grading Limits Shading
Cyan	(7)	Proposed MSE or CIP Wall Shading
Red	(3)	Proposed Bridge Shading and Sign Trusses
Black w/Gray, Light Fill	(0,48)	Previously Constructed Structure

PLAN VIEW PATTERN AND SYMBOL LEGEND OF TRAFFIC CONTROL AND STAGING SHEETS

Channelizing Device	Crash Cushion (Temp or Perm)
Drum	Traffic Signal
Temporary Lane Separator	Flagger
Tubular Marker	Temporary Floodlighting
Channelizer Marker	Traffic Sign
Concrete Barrier Marker	Type III Barricade
Delineator	Type A Warning Light
Temporary Barrier Rail	Direction of Traffic
Pavement Removal	Safety Closure
Sand Barrel Layout	Lane Identification

NOTE: Device spacing according to Standard Road Plans unless specifically dimensioned.

TRAFFIC CONTROL AND STAGING LEGEND AND SYMBOL INFORMATION SHEET

(COVERS SHEET SERIES J)

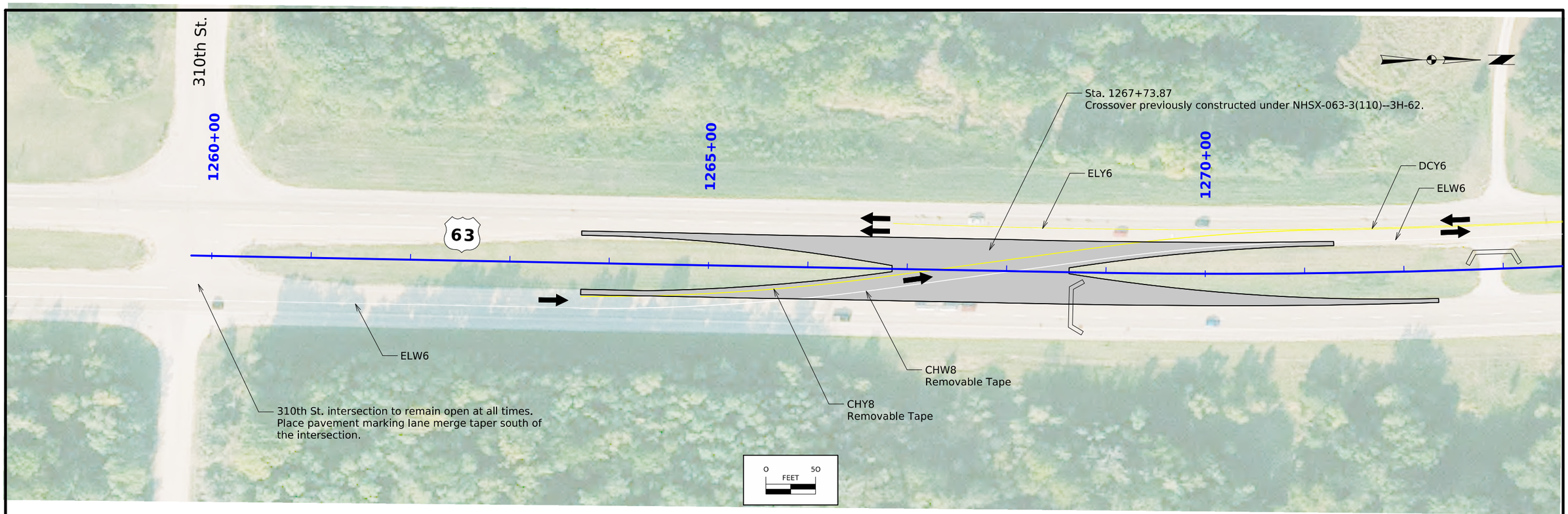

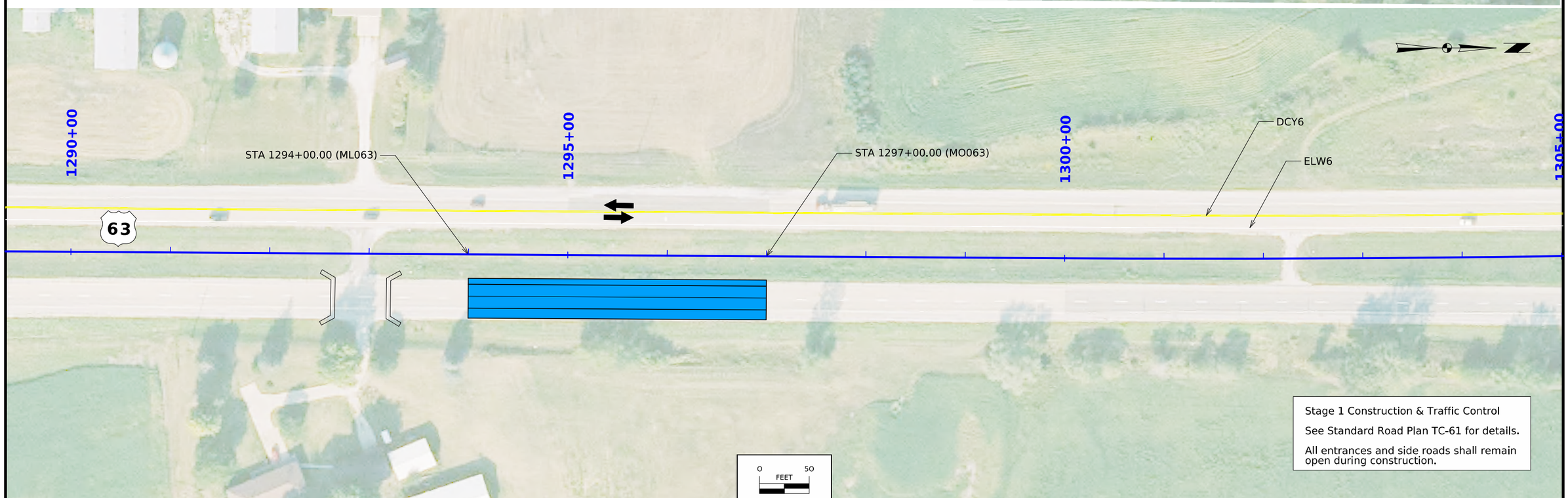

Stage 1 Construction & Traffic Control

See Standard Road Plan TC-61 for details.

All entrances and side roads shall remain open during construction.

FILE NO.	ENGLISH	DESIGN TEAM Miller/Koch	Mahaska COUNTY	PROJECT NUMBER NHSX-063-3(108)--3H-62	SHEET NUMBER J.5

9:48:31 AM 4/2/2026 jkoch pw:\\NTPwint1.dot.int.lan:PWMain\Documents\Projects\6206301025\Design\NHSX-063-3(108)--3H-62\CADD_Files\Sheet_Files\SHT_62063108_J01.dgn

Stage 1 Construction & Traffic Control

See Standard Road Plan TC-61 for details.

All entrances and side roads shall remain open during construction.

FILE NO.	ENGLISH	DESIGN TEAM Miller/Koch	Mahaska COUNTY	PROJECT NUMBER NHSX-063-3(108)--3H-62	SHEET NUMBER J.6

9:48:33 AM 4/2/2026 jkoch pw:\\NTPwint1.dot.int.lan:PWMain\Documents\Projects\6206301025\Design\NHSX-063-3(108)--3H-62\CADD_Files\Sheet_Files\SHT_62063108_J01.dgn

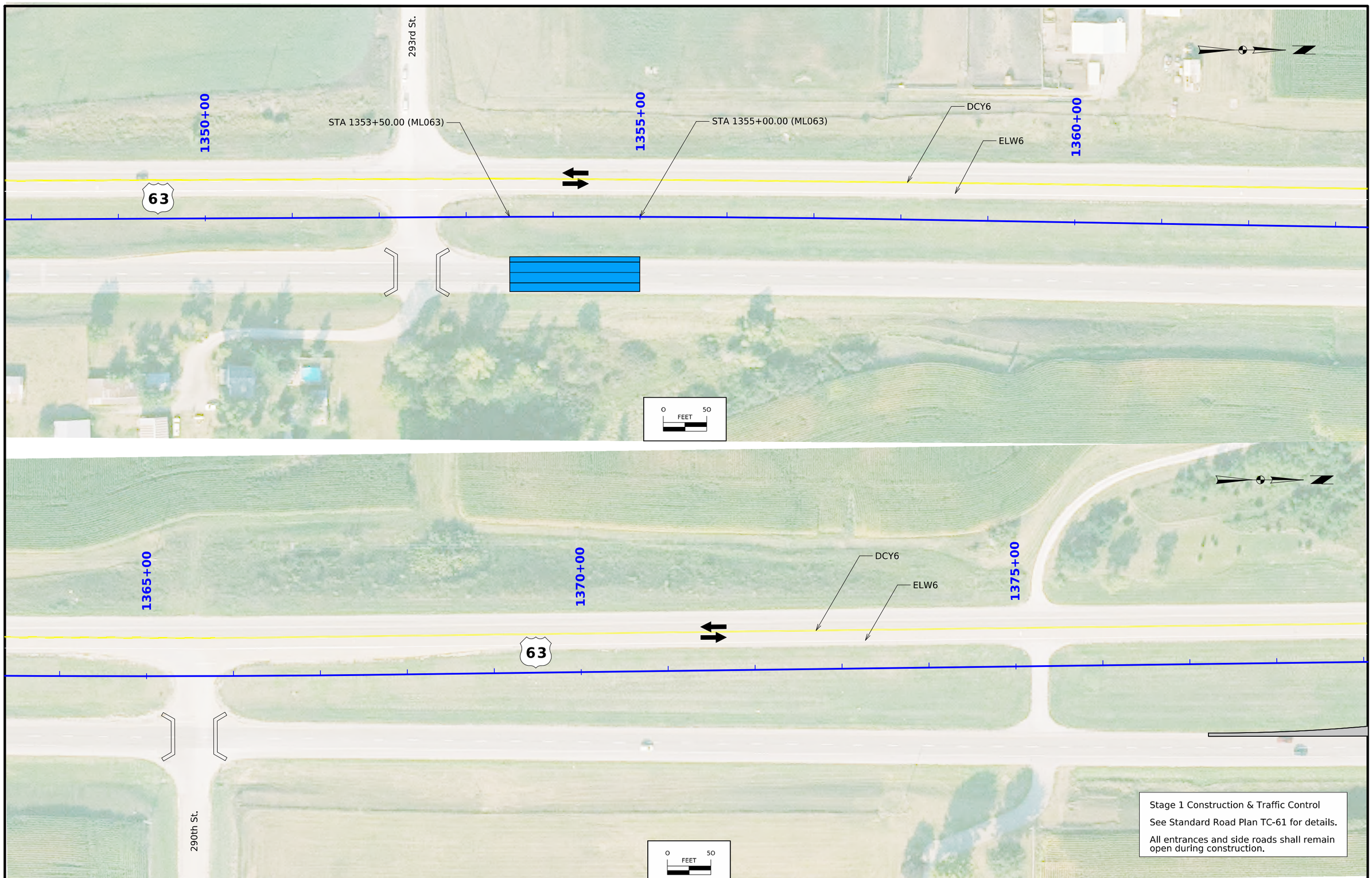

Stage 1 Construction & Traffic Control

See Standard Road Plan TC-61 for details.

All entrances and side roads shall remain open during construction.

FILE NO.	ENGLISH	DESIGN TEAM Miller/Koch	Mahaska COUNTY	PROJECT NUMBER NHSX-063-3(108)--3H-62	SHEET NUMBER J.7

9:48:35 AM 4/2/2026 jkoch pw:\\NTPwint1.dot.int.lan:PWMain\Documents\Projects\6206301025\Design\NHSX-063-3(108)--3H-62\CADD_Files\Sheet_Files\SHT_62063108_J01.dgn

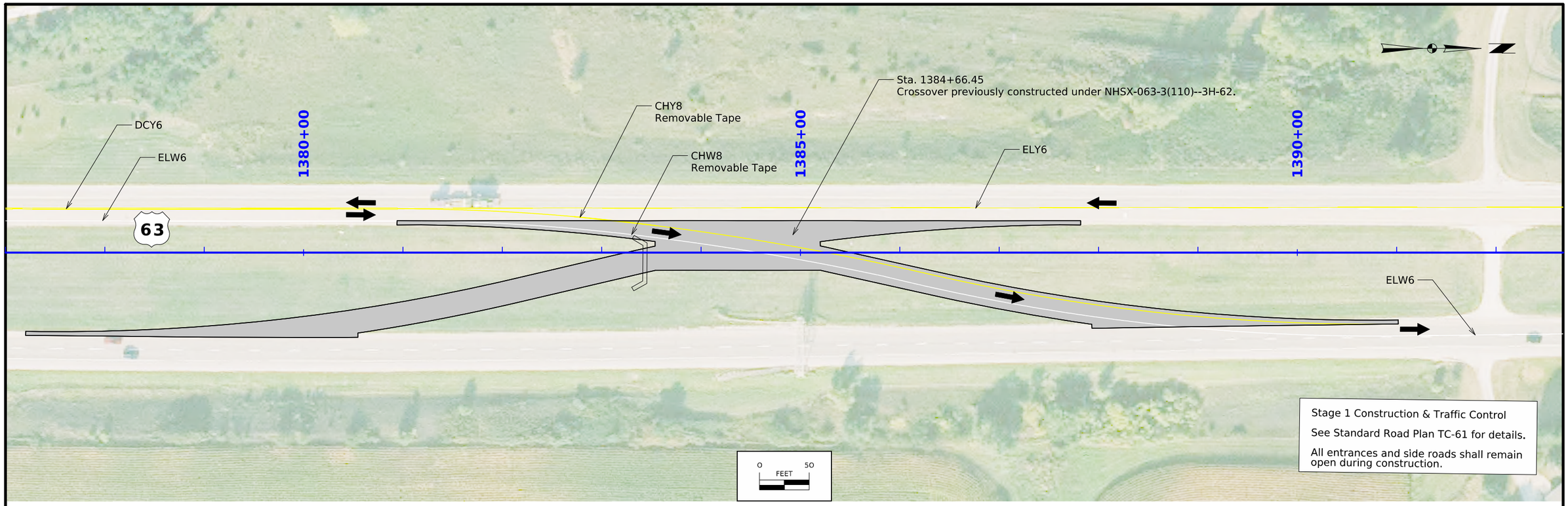

FILE NO.	ENGLISH	DESIGN TEAM Miller/Koch	Mahaska COUNTY	PROJECT NUMBER NHSX-063-3(108)--3H-62	SHEET NUMBER J.8

9:44:11 AM 4/27/2026 jkoch pw:\\NTPwint1.dot.int.lan:PWMain\Documents\Projects\6206301025\Design\NHSX-063-3(108)--3H-62\CADD_Files\Sheet_Files\SHT_62063108_J01.dgn

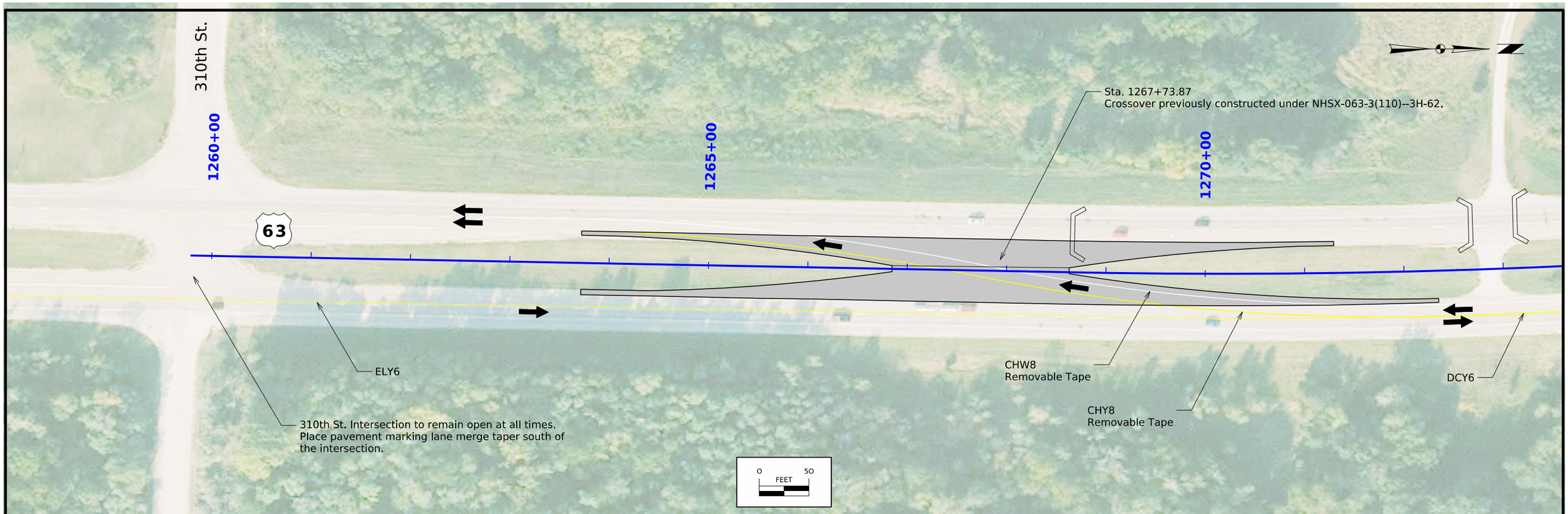

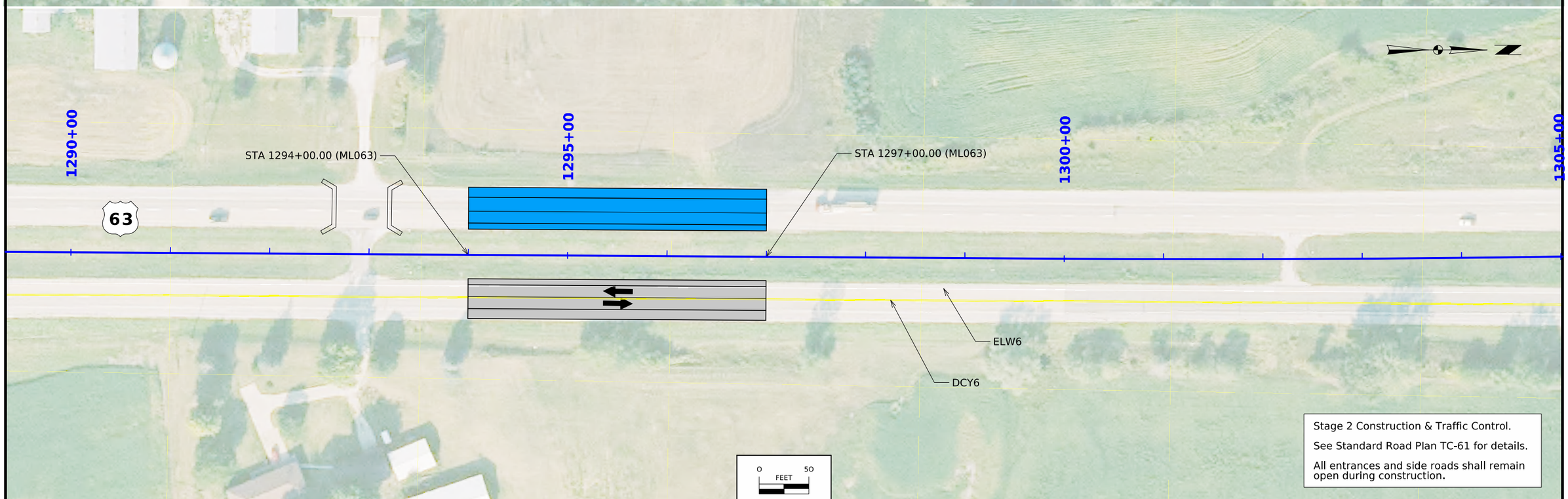

Stage 2 Construction & Traffic Control.

See Standard Road Plan TC-61 for details.

All entrances and side roads shall remain open during construction.

FILE NO.	ENGLISH	DESIGN TEAM Miller/Koch	Mahaska COUNTY	PROJECT NUMBER NHSX-063-3(108)--3H-62	SHEET NUMBER J.9

10:36:00 AM 4/2/2026 jkoch pw:\\NTPwint1.dot.int.lan:PWMain\Documents\Projects\6206301025\Design\NHSX-063-3(108)--3H-62\CADD_Files\Sheet_Files\SHT_62063108_J02.dgn

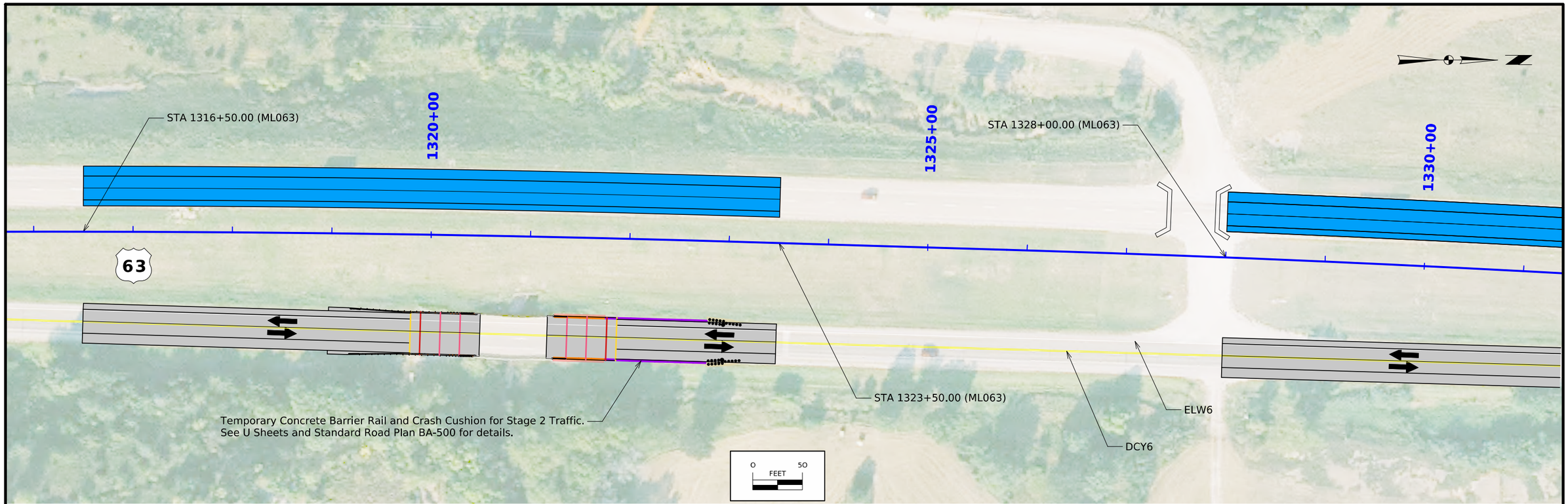

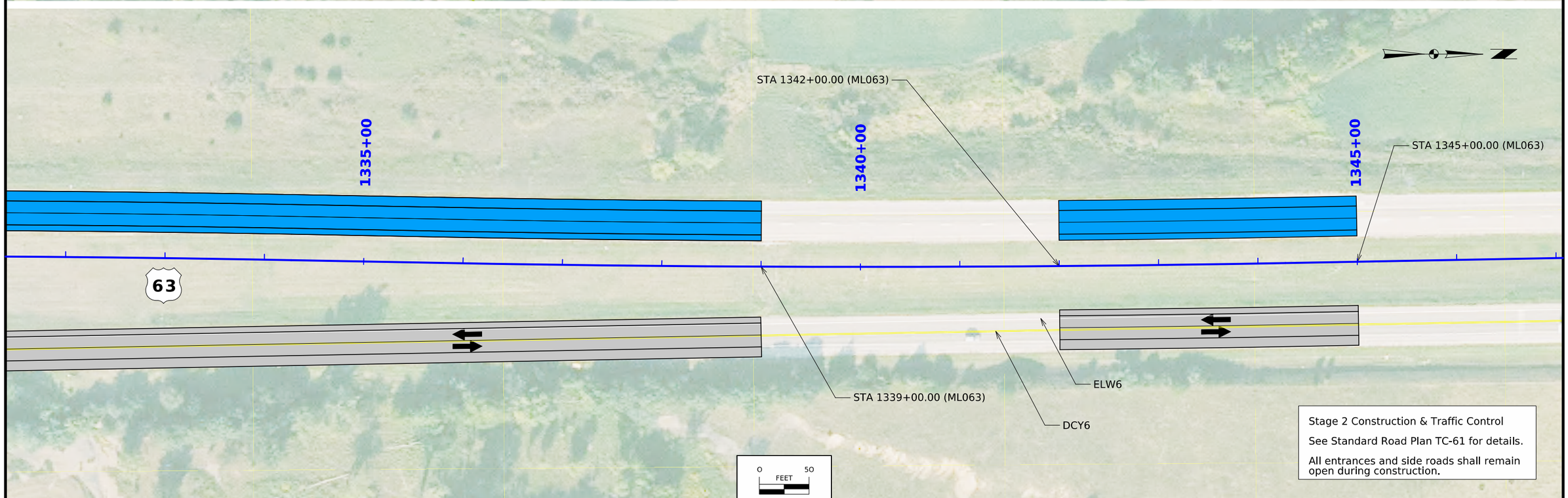

Stage 2 Construction & Traffic Control

See Standard Road Plan TC-61 for details.

All entrances and side roads shall remain open during construction.

FILE NO.	ENGLISH	DESIGN TEAM Miller/Koch	Mahaska COUNTY	PROJECT NUMBER NHSX-063-3(108)--3H-62	SHEET NUMBER J.10

10:36:06 AM 4/2/2026 jkoch pw:\\NTPwint1.dot.int.lan:PWMain\Documents\Projects\6206301025\Design\NHSX-063-3(108)--3H-62\CADD_Files\Sheet_Files\SHT_62063108_J02.dgn

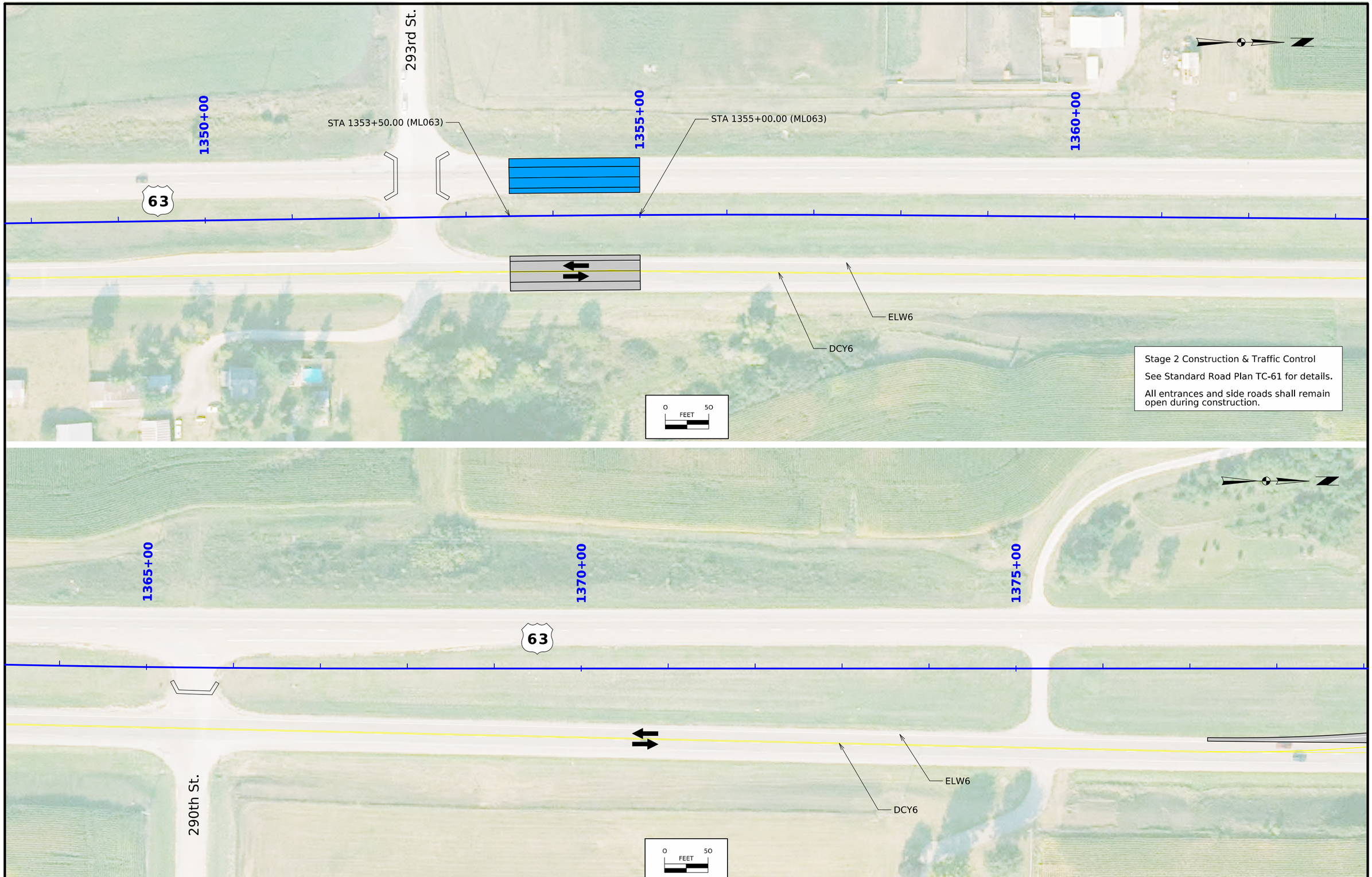

FILE NO.	ENGLISH	DESIGN TEAM Miller/Koch	Mahaska COUNTY	PROJECT NUMBER NHSX-063-3(108)--3H-62	SHEET NUMBER J.11

10:36:08 AM 4/2/2026 jkoch pw:\\NTPwint1.dot.int.lan:PWMain\Documents\Projects\6206301025\Design\NHSX-063-3(108)--3H-62\CADD_Files\Sheet_Files\SHT_62063108_J02.dgn

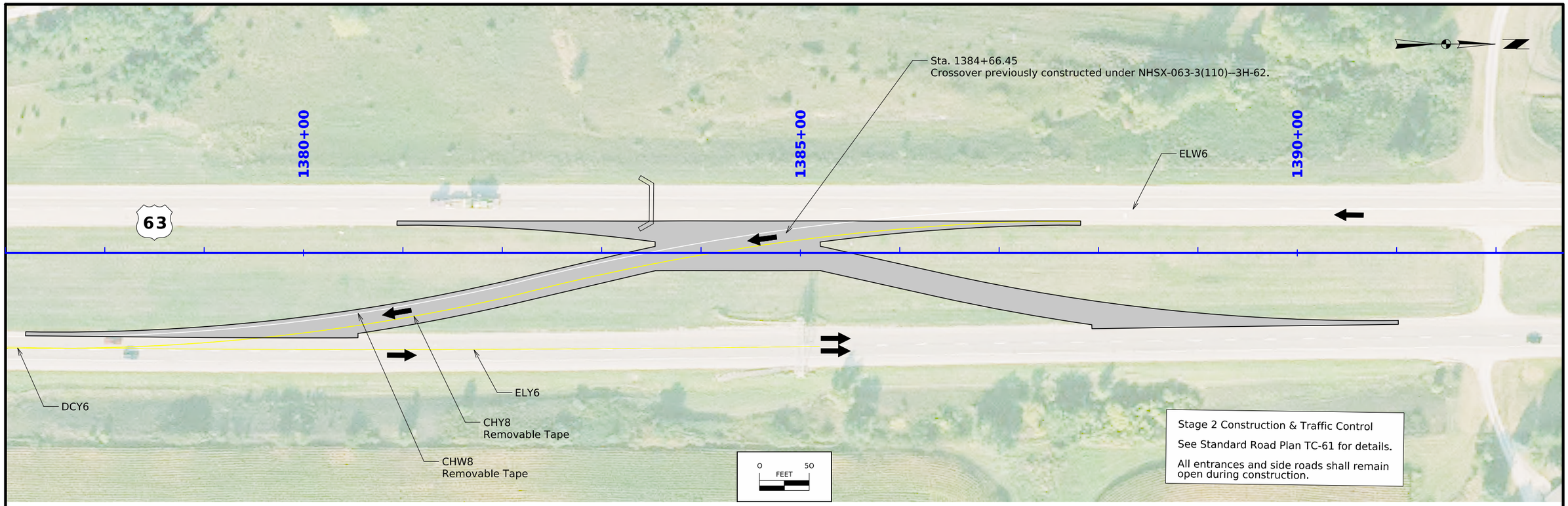

FILE NO.	ENGLISH	DESIGN TEAM Miller/Koch	Mahaska COUNTY	PROJECT NUMBER NHSX-063-3(108)--3H-62	SHEET NUMBER J.12

10:36:09 AM 4/2/2026 jkoch pw:\\NTPwint1.dot.int.lan:PWMain\Documents\Projects\6206301025\Design\NHSX-063-3(108)--3H-62\CADD_Files\Sheet_Files\SHT_62063108_J02.dgn

LANDSCAPE DESIGN

STATE OF IOWA
Rachel
A. Harris
LA000775
PROFESSIONAL LANDSCAPE ARCHITECT

I hereby certify that the portion of this technical submission described below was prepared by me or under my direct supervision and responsible charge. I am a duly licensed professional landscape architect under the laws of the state of Iowa.

Signature 07-06-2026 Date

Rachel A. Harris
Printed or Typed Name

My license renewal date is June 30, 2028

Pages or sheets covered by this seal: RC.1 - RC.7; RR.1 - RR.6

ESTIMATED PROJECT QUANTITIES AND REFERENCE NOTES

Item no.	Item Code	Item	Unit	Quantities Estimated Roadside Items	Estimate Reference Notes
1	2601-2634100	MULCHING	ACRE	1.8	Perform mulching according to Article 2601.03, E, 2, of the Standard Specifications. Anchor mulch into the soil using mulch anchoring equipment with a minimum of two passes. Item is included for areas requiring reshaping and seedbed preparation except where slope protection has been applied. Use mulch that is Certified Noxious Weed Seed Free Mulch as certified by the Iowa Crop Improvement Association or adjacent states Crop Improvement Associations. Mulch Rate: 1 1/2 tons of dry cereal straw or native grass straw per acre.
2	2601-2636043	SEEDING AND FERTILIZING (RURAL)	ACRE	1.8	Seed and fertilize all areas 8 foot adjacent to the shoulder mainline, medians, and side according to Article 2601.03, C, 3, of the Standard Specifications.
3	2601-2642100	STABILIZING CROP - SEEDING AND FERTILIZING	ACRE	1.8	Seed and fertilize all disturbed areas according to Article 2601.03, C, 1, of the Standard Specifications.
4	2602-0000150	STABILIZED CONSTRUCTION ENTRANCE, EC-303	LF	500	Refer to Standard Road Plan EC-303.
5	2602-0000312	PERIMETER AND SLOPE SEDIMENT CONTROL DEVICE, 12 IN. DIA.	LF	500	Refer to Standard Road Plan EC-204. Item is included for temporary perimeter sediment control, inlet protection, and water velocity reduction on slopes or ditches at locations to be determined during construction. Verify specific locations with the Engineer prior to beginning placement.
6	2602-0000320	PERIMETER AND SLOPE SEDIMENT CONTROL DEVICE, 20 IN. DIA.	LF	500	Refer to Standard Road Plan EC-204. Item is included for temporary perimeter sediment control, inlet protection, and water velocity reduction on slopes or ditches at locations to be determined during construction. Verify specific locations with the Engineer prior to beginning placement.
7	2602-0000351	REMOVAL OF PERIMETER AND SLOPE OR DITCH CHECK SEDIMENT CONTROL DEVICE	LF	1,000	
8	2602-0010010	MOBILIZATIONS, EROSION CONTROL	EACH	1	
9	2602-0010020	MOBILIZATIONS, EMERGENCY EROSION CONTROL	EACH	1	

281_03
11/9/23

STORM WATER BEST MANAGEMENT PRACTICES

When the following best management practices are used, they are intended to account for disturbed areas where storage volume cannot be provided: Perimeter and Slope Sediment Control Devices and Seeding.

111_25
4/21/26

INDEX OF TABULATIONS

Line No.	Tabulation	Tabulation Title	Sheet No.
1.0	111_25	INDEX OF TABULATIONS	RC.4
2.0	105_04	STANDARD ROAD PLANS	RC.5
3.0	110_12	POLLUTION PREVENTION PLAN	RC.6 - RC.7

105_04
4/21/26

STANDARDS

The following Standards apply to construction work on this project.

Number	Date	Title
EC-204	10-19-21	Perimeter, Slope and Ditch Check Sediment Control Devices
EC-303	10-19-21	Stabilized Construction Entrance
EC-502	04-21-15	Seeding in Rural Areas

POLLUTION PREVENTION PLAN

This project is regulated by the requirements of the Iowa Department of Natural Resources (DNR) National Pollutant Discharge Elimination System (NPDES) General Permit No. 2 OR an Iowa Department of Natural Resources (DNR) National Pollutant Discharge Elimination System (NPDES) individual storm water permit. The Contractor shall carry out the terms and conditions of this permit and the Pollution Prevention Plan (PPP).

This Base PPP includes information on Roles and Responsibilities, Project Site Description, Controls, Maintenance Procedures, Inspection Requirements, Non-Storm Water Controls, Potential Sources of Off Right-of-Way Pollution, and Definitions. This plan references other documents rather than repeating the information contained in the documents. A copy of this Base Pollution Prevention Plan, amended as needed during construction, will be readily available for review.

All contractors shall conduct their operations in a manner that controls pollutants, minimizes erosion, and prevents sediments from entering waters of the state and leaving the highway right-of-way. The Contractor shall be responsible for compliance and implementation of the PPP for their entire contract. This responsibility shall be further shared with subcontractors whose work is a source of potential pollution as defined in this PPP.

I. ROLES AND RESPONSIBILITES

A. Designer:
1. Prepares Base PPP included in the project plan.
2. Prepares Notice of Intent (NOI) submitted to Iowa DNR.
3. Is signature authority on the Base PPP. If consultant designed, signature from Contracting Authority is also required.

B. Contractor:
1. Signs a co-permittee certification statement adhering to the requirements of the NPDES permit and this PPP. All co-permittees are legally required under the Clean Water Act and the Iowa Administrative Code to ensure compliance with the terms and conditions of this PPP.
2. Designates a Water Pollution Control Manager (WPCM), who has the duties and responsibilities as defined in Section 2602 of the Standard Specifications.
3. Submits an Erosion Control Implementation Plan (ECIP) and ECIP updates according to Section 2602 of the Standard Specifications.
4. Installs and maintains appropriate controls. This work may be subcontracted as documented through Subcontractor Request Forms (Form 830231).
5. Supervises and implements good housekeeping practices according to Paragraph III, C, 2.
6. Conducts joint required inspections of the site with inspection staff. When Contractor is not mobilized on site, Contractor may delegate this responsibility to a trained or certified subcontractor. Contracting Authority also may waive joint inspection requirement during winter shutdown. In both circumstances, WPCM (or trained or certified delegate from the Contractor) is still responsible to review and sign inspection reports.
7. Complies with training and certification requirements of Section 2602 of the Standard Specifications.
8. Submits amended PPP site map according to Section 2602 of the Standard Specifications.

C. Subcontractors:
1. Sign a co-permittee certification statement adhering to the requirements of the NPDES permit and this PPP if: responsible for sediment or erosion controls; involved in land disturbing activities; or perorming work that is a source of potential pollution as defined in this PPP. Subcontracted work items are identified in Subcontractor Request Forms (Form 830231). All co-permittees are legally required under the Clean Water Act and the Iowa Administrative Code to ensure compliance with the terms and conditions of this PPP.
2. Implement good housekeeping practices according to Paragraph III, C, 2.

D. RCE/Project Engineer:
1. Is Project Storm Water Manager.
2. On projects where DOT is the Contracting Authority, is current with erosion control training or certification.
3. Takes actions necessary to ensure compliance with storm water requirements including, where appropriate, issuing stop work orders, and directing additional inspections at construction project sites that are experiencing problems with achieving permit compliance.
4. Orders the taking of measures to cease, correct, prevent, or minimize the consequences of non-compliance with the storm water requirements of the Applicable Permit.
5. Supervises all work necessary to meet storm water requirements at the Project, including work performed by contractors and subcontractors.
6. Requires employees, contractors, and subcontractors to take appropriate responsive action to comply with storm water requirements, including requiring any such person to cease or correct a violation of storm water requirements, and to order or recommend such other actions as necessary to meet storm water requirements.
7. Is familiar with the Project PPP and storm water site map.
8. On projects where DOT is Contracting Authority, is responsible for periodically monitoring inspection reports to determine whether deficiencies identified in inspection reports were adequately and timely addressed, and if not, has the authority and responsibility to direct immediate actions to correct the deficiencies.
9. Is the point of contact for the Project for regulatory officials, Inspector, contractors, and subcontractors regarding storm water requirements.
10. Is signature authority on Notice of Discontinuation.
11. Maintains an up-to-date record of contractors, subcontractors, and subcontracted work items through Subcontractor Request Forms (Form 830231).
12. Makes information to determine permit compliance available to the DNR upon their request.

POLLUTION PREVENTION PLAN

E. Inspector:
1. Updates PPP through fieldbook entries and storm water site inspection reports if there is a change in design, construction, operation, or maintenance which has a significant effect on the discharge of pollutants from the project.
2. Makes information to determine permit compliance available to the DNR upon their request.
3. Conducts joint required inspections of the site with the contractor/subcontractor.
4. Completes an inspection report after each inspection.
5. Is signature authority on storm water inspection reports.

II. PROJECT SITE DESCRIPTION

A. This Pollution Prevention Plan (PPP) is for PCC Pavement Replacement.
B. This PPP covers approximately 25.5 acres with an estimated 6.5 acres being disturbed. The portion of the PPP covered by this contract has 6.5 acres disturbed.
C. The PPP is located in an area of Otley-Ladoga soil association. The estimated weighted average runoff coefficient number for this PPP after completion will be .33.
D. Storm Water Site Map is located in the R sheets. Proposed slopes are shown in cross sections, details, or standard road plans. Supplemental information is located in the Tabulations in the C or CE sheets.
E. The base storm water site map is amended by contract modifications and progress payments (fieldbook entries) of completed erosion control work. Also, due to project phasing, erosion and sediment controls shown on project plans may not be installed until needed, based on site conditions. For example, silt fence ditch checks will typically not be installed until the ditch has been installed. Installed locations may also be modified from tabulation locations by field staff. Installed locations will be documented by fieldbook entries and amended PPP site map.
F. Runoff from this work will flow into unnamed waterways to Muchakinock Creek to the Des Moines River .

III. CONTROLS

A. The Contractor’s ECIP specified in Article 2602.03 of the Standard Specifications for accomplishment of storm water controls should clearly describe the intended sequence of major activities, and for each activity define the control measure and the timing during the construction process that the measure will be implemented.
B. Preserve vegetation in areas not needed for construction.
C. Sections 2601 and 2602 of the Standard Specifications define requirements to implement erosion and sediment control measures. Actual quantities used and installed locations may vary from the Base PPP and amendment of the plan will be documented via fieldbook entries, amended PPP site map, or by contract modification. Additional erosion and sediment control items may be required as determined by the inspector and/or contractor during storm water site inspections. If the work involved is not applicable to any contract items, the work will be paid for according to Article 1109.03 paragraph B of the Standard Specifications.

1. EROSION AND SEDIMENT CONTROLS

a. Stabilization Practices
1) Site plans will ensure that existing vegetation or natural buffers are preserved where attainable and disturbed portions of the site will be stabilized.
2) Initialize stabilization of disturbed areas immediately after clearing, grading, excavating, or other earth disturbing activities have:
a) Permanently ceased on any portion of the site, or
b) Temporarily ceased on any portion of the site and will not resume for a period exceeding 14 calendar days.
3) Staged permanent and/or temporary stabilizing seeding and mulching shall be completed as the disturbed areas are completed. Incomplete areas shall be stabilized according to paragraph III, C, 1, a, 2, b above.
4) Permanent and Temporary Stabilization practices to be used for this project are located in the storm water site map, Estimated Project Quantities (100-0A, 100-1A, or 100-1C), and Estimate Reference Information (100-4A) located in the C or R sheets. Typical drawings detailing construction of the practices to be used on this project are referenced in the Standard Road Plans Tabulation (105-4) in the C or R sheets.
5) Preservation of existing vegetation within right-of-way or easements will act as vegetative buffer strips.
6) Preservation of topsoil: Bid items to be used for this project are located in the Estimated Project Quantities (100-0A, 100-1A, or 100-1C) and Estimate Reference Information (100-4A) located in the C or R sheets. Additional information may be found in the Tabulations in the C or T Tabulation sheets, or is referenced in Section 2105 of the Standard Specifications.

b. Structural Practices
1) Structural practices will be implemented to divert flows from exposed soils and detain or otherwise limit runoff and the discharge of pollutants from exposed areas of the site. Additionally, structural practices may include: silt basins that provide 3600 cubic feet of storage per acre drained or equivalent sediment controls, outlet structures that withdraw water from surface when discharging basins, and controls to direct storm water to vegetated areas.
2) Structural practices to be used for this project are located in the storm water site map, Estimated Project Quantities (100-0A, 100-1A, or 100-1C), and Estimate Reference Information (100-4A) located in the C or R sheets, as well as all other item specific Tabulations. Typical drawings detailing construction of the devices to be used on this project can be found on the B or R sheets or are referenced in the Standard Road Plans Tabulation (105-4) located in the C or R sheets.

POLLUTION PREVENTION PLAN

c. Storm Water Management
Measures shall be installed during the construction process to control pollutants in storm water discharges that will occur after construction operations have been completed. This may include velocity dissipation devices at discharge locations and along length of outfall channel as necessary to provide a non-erosion velocity flow from structure to water course. If included with this project, these items are located in the storm water site map and Estimated Project Quantities (100-0A, 100-1A, or 100-1C) and Estimate Reference Information (100-4A) located in the C or R sheets, as well as all other item specific Tabulations. Typical drawings detailing construction of the practices to be used on this project are referenced in the Standard Road Plans Tabulation. The installation of these devices may be subject to Section 404 of the Clean Water Act.

2. OTHER CONTROLS
Contractor disposal of unused construction materials and construction material wastes shall comply with applicable state and local waste disposal, sanitary sewer, or septic system regulations. In the event of a conflict with other governmental laws, rules and regulations, the more restrictive laws, rules or regulations shall apply.
a. Vehicle Entrances and Exits - Construct and maintain entrances and exits to prevent tracking of sediments onto roadways.
b. Material Delivery, Storage and Use - Implement practices to prevent discharge of construction materials during delivery, storage, and use.
c. Stockpile Management - Install controls to reduce or eliminate pollution of storm water from stockpiles of soil and paving.
d. Waste Disposal - Do not discharge any materials, including building materials, into waters of the state, except as authorized by a Section 404 permit.
e. Spill Prevention and Control - Implement chemical spill and leak prevention and response procedures to contain and clean up spills and prevent material discharges to the storm drain system and waters of the state.
f. Concrete Residuals and Washout Wastes - Waste shall not be discharged to a surface water and is not allowed to adversely affect a water of the state. Designate temporary concrete washout facilities for rinsing out concrete trucks. Provide directions to truck drivers where designated washout facilities are located. Designated washout areas should be located at least 50 feet away from storm drains, streams or other water bodies. Care should be taken to ensure these facilities do not overflow during storm events.
g. Concrete Grooving/Grinding Slurry – Do not discharge slurry to a waterbody or storm drain. Slurry may be applied on foreslopes or removed from the project.
h. Vehicle and Equipment Storage and Maintenance Areas - Perform on site fueling and maintenance in accordance with all environment laws such as proper storage of onsite fuels and proper disposal of used engine oil or other fluids on site. Employ washing practices that prevent contamination of surface and ground water from wash water. Wash waters must be treated in a sediment basin or alternative control that provides equivalent or better treatment prior to discharge.
i. Litter Management - Ensure employees properly dispose of litter. Minimize exposure of trash if exposure to precipitation or storm water would result in a discharge of pollutants.
j. Dewatering – Properly treat water to remove suspended sediment before it re-enters a waterbody or discharges off-site. Measures are also to be taken to prevent scour erosion at dewatering discharge point.

3. APPROVED STATE OR LOCAL PLANS
During the course of this construction, it is possible that situations will arise where unknown materials will be encountered. When such situations are encountered, they will be handled according to all federal, state, and local regulations in effect at the time.

IV. MAINTENANCE PROCEDURES
The Contractor is required to maintain all temporary erosion and sediment control measures in proper working order, including cleaning, repairing, or replacing them throughout the contract period. This shall begin when the features have lost 50% of their capacity.

V. INSPECTION REQUIREMENTS
A. Inspections shall be made jointly by the Contractor and the Contracting Authority's inspector at least once every seven calendar days. Storm water site inspections will include:
1. Date of the inspection.
2. Summary of the scope of the inspection.
3. Name and qualifications of the personnel making the inspection.
5. Review of erosion and sediment control measures within disturbed areas for the effectiveness in preventing impacts to receiving waters.
6. Major observations related to the implementation of the PPP.
7. Identification of corrective actions required to maintain or modify erosion and sediment control measures.
B. Include storm water site inspection reports in the Amended PPP. Incorporate any additional erosion and sediment control measures determined as a result of the inspection. Immediately begin corrective actions on all deficiencies found within 3 calendar days of the inspection and complete within 7 calendar days following the inspection. If it is determined that making the corrections less than 72 hours after the inspection is impracticable, it should be documented why it is impracticable and indicate an estimated date by which the corrections will be made.

VI. NON-STORM WATER DISCHARGES

110_12
1/13/23

POLLUTION PREVENTION PLAN

This includes subsurface drains (i.e. longitudinal and standard subdrains) and slope drains. The velocity of the discharge from these features may be controlled by the use of headwalls or blocks, Class A stone, erosion stone or other appropriate materials. This also includes uncontaminated groundwater from dewatering operations, which will be controlled as discussed in Section III of the PPP.

VII. POTENTIAL SOURCES OF OFF RIGHT-OF-WAY (ROW) POLLUTION
Silts, sediment, and other forms of pollution may be transported onto highway right-of-way (ROW) as a result of a storm event. Potential sources of pollution located outside highway ROW are beyond the control of this PPP. Pollution within highway ROW will be conveyed and controlled per this PPP.

VIII. DEFINITIONS
A. Base PPP - Initial Pollution Prevention Plan.
B. Amended PPP - Base PPP amended during construction. May include Plan Revisions or Contract Modifications for new items, storm water site inspection reports, fieldbook entries made by the inspector, amended PPP site map by the Contractor, ECIP, NOI, co-permittee certifications, and Subcontractor Request Forms. Items amending the PPP are stored electronically and are readily available upon request.
C. Fieldbook Entries – This contains the inspector’s daily diary and bid item postings.
D. Controls - Methods, practices, or measures to minimize or prevent erosion, control sedimentation, control storm water, or minimize contaminants from other types of waste or materials. Also called Best Management Practices (BMPs).
E. Signature Authority - Representative authorized to sign various storm water documents.

CERTIFICATION STATEMENT
I certify under penalty of law that this document and all attachments were prepared under my direction or supervision in accordance with a system designed to assure that qualified personnel properly gathered and evaluated the information submitted. Based on my inquiry of the person or persons who manage the system, or those persons directly responsible for gathering the information, the information submitted is, to the best of my knowledge and belief, true, accurate, and complete. I am aware that there are significant penalties for submitting false information, including the possibility of fine and imprisonment for knowing violations.

Nathan Pohlen
Signature

Nathan J. Pohlen
Print Name

LINE STYLE LEGEND OF LANDSCAPE SHEETS

LINESTYLE	Design Element
- - - - - - - - - - - -	Living Snow Fence Single Row
:::::::::::::::::::	Living Snow Fence Double Row
———	Mechanical Edge

CELL LEGEND OF LANDSCAPE SHEETS

CELL	Design Element	Plant Diameter
	Clearing	
	Proposed Shrub	6 FT
	Proposed Understory Tree	12 FT
	Proposed Conifer Tree	18 FT
	Proposed Overstory Tree	30 FT

PATTERN LEGEND OF LANDSCAPE SHEETS

- Brush Clearing
- Spray Area
- Clearing & Grubbing

LINE STYLE LEGEND OF EROSION CONTROL SHEETS

LINESTYLE	Design Element
	Silt Fence
9	Perimeter and Slope Sediment Control Device (9")
12	Perimeter and Slope Sediment Control Device (12")
20	Perimeter and Slope Sediment Control Device (20")
	Open-Throat Curb Intake Sediment Filter
	Concentrated Flow
	Rock Check and Rock Check Dam
	Sheet Flow

CELL LEGEND OF EROSION CONTROL SHEETS

CELL	Design Element
	Temporary Sediment Control basin
	Erosion Control for Circular Intake or Manhole Well
	Erosion Control for Rectangular Intake or Manhole Well
	Grate Intake Sediment Filter Bag
	Silt Basin
	Silt Fence Tail
	Stormwater Drainage Basin Discharge Point

PLAN VIEW COLOR LEGEND OF EROSION CONTROL SHEETS

LINEWORK	Design Color No.		
Green	(2)		Existing Topographic Features and Labels
Blue	(1)		Proposed Alignment, Stationing, Tic Marks, and Alignment Annotation
Magenta	(5)		Existing Utilities
Black	(0)		Permanent Erosion Control Features
Blaze Orange	(222)		Temporary Erosion Control Features

SHADING	Design Color No.			Transparency
Citron	(234)		Mulching, All Types	50%
Light Brown	(238)		Special Ditch Control, Wood Excelsior Mat	0%
Grass Green	(233)		8FT Mow Strip	50%
Red	(3)		Delineates Restricted Areas	0%

PATTERN LEGEND OF EROSION CONTROL SHEETS

- Seeding and Fertilizing
- R — Seeding and Fertilizing (Rural)
- U — Seeding and Fertilizing (Urban)
- N — Native Grass Seeding
- ST — Salt Tolerant Seeding
- WL — Wetland Grass Seeding
- WF — Wildflower Seeding
- SOD — Sodding
- Turf Reinforcement Mat Type 1
- Turf Reinforcement Mat Type 2
- Turf Reinforcement Mat Type 3
- Turf Reinforcement Mat Type 4
- Slope Protection, Wood Excelsior Mat
- Transition Mat
- Rock Features, Permanent
- Rock Features, Temporary

LEGEND AND SYMBOL INFORMATION SHEET

(COVERS SHEET SERIES D & R)

FILE NO.	ENGLISH	DESIGN TEAM Harris/Pohlen/McDonald	Mahaska COUNTY	PROJECT NUMBER NHSX-063-3(108)--3H-62	SHEET NUMBER RR.2

12:12:10 PM 4/14/2026 npohlen pw:\\NTPwint1.dot.int.lan:PWMain\Documents\Projects\6206301025\Roadside\108_E04\62063108_Siteplan.dgn

FILE NO.	ENGLISH	DESIGN TEAM Harris/Pohlen/McDonald	Mahaska COUNTY	PROJECT NUMBER NHSX-063-3(108)--3H-62	SHEET NUMBER RR.3

12:13:28 PM 4/14/2026 npohlen pw:\\NTPwint1.dot.int.lan:PWMain\Documents\Projects\6206301025\Roadside\108_E04\62063108_Siteplan.dgn

FILE NO.	ENGLISH	DESIGN TEAM Harris/Pohlen/McDonald	Mahaska COUNTY	PROJECT NUMBER NHSX-063-3(108)--3H-62	SHEET NUMBER RR.4

12:13:29 PM 4/14/2026 npohlen pw:\\NTPwint1.dot.int.lan:PWMain\Documents\Projects\6206301025\Roadside\108_E04\62063108_Siteplan.dgn

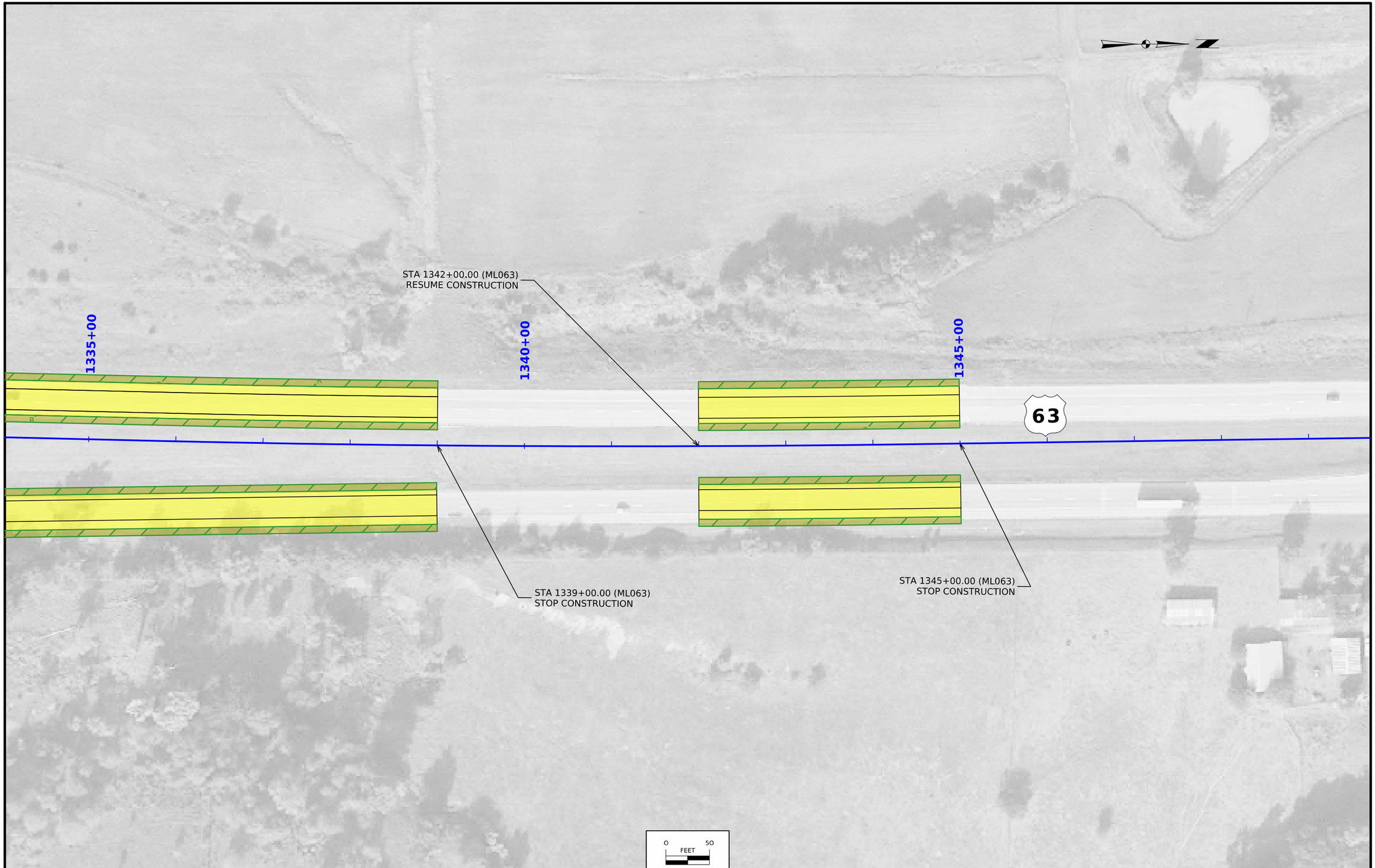

FILE NO.	ENGLISH	DESIGN TEAM Harris/Pohlen/McDonald	Mahaska COUNTY	PROJECT NUMBER NHSX-063-3(108)--3H-62	SHEET NUMBER RR.5

12:13:42 PM 4/14/2026 npohlen pw:\\NTPwint1.dot.int.lan:PWMain\Documents\Projects\6206301025\Roadside\108_E04\62063108_Siteplan.dgn

FILE NO.	ENGLISH	DESIGN TEAM Harris/Pohlen/McDonald	Mahaska COUNTY	PROJECT NUMBER NHSX-063-3(108)--3H-62	SHEET NUMBER RR.6

12:13:51 PM 4/14/2026 npohlen pw:\\NTPwint1.dot.int.lan:PWMain\Documents\Projects\6206301025\Roadside\108_E04\62063108_Siteplan.dgn

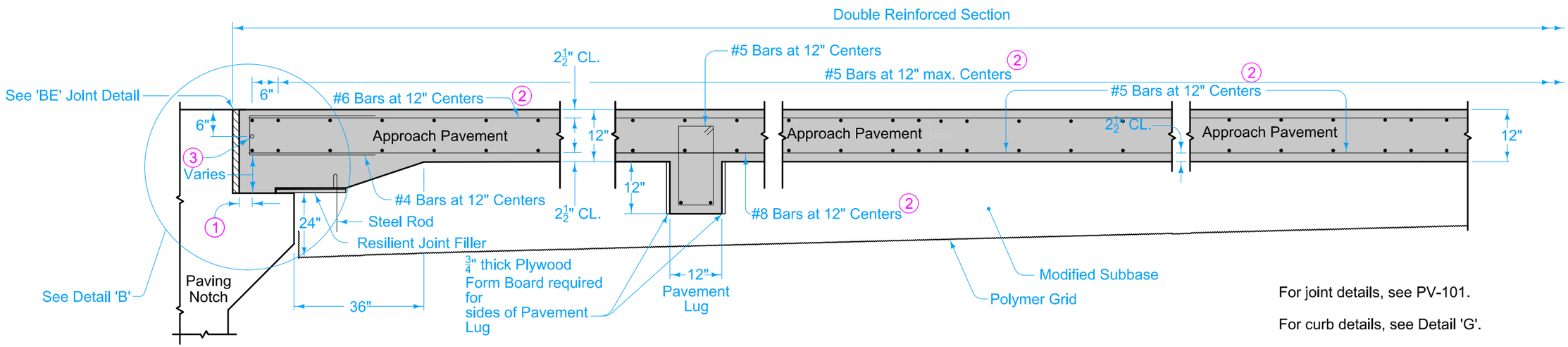

DETAIL 'A'

For joint details, see PV-101.

For curb details, see Detail 'G'.

All Transverse Bars are #5.

See Modified BR-211 for shoulders.

1. 2" to $2\frac{1}{2}$" clear to bent bar.
2. Minimum lap length: #5 bars - 18 inches
   #6 bars - 27 inches
   #8 bars - 48 inches
3. If bridge is skewed, place additional #5 bar parallel to skewed face.

Possible Contract Item:
Bridge Approach, BR-204
Longitudinal Grooving in Concrete, Bridge Deck and/or Approaches

Possible Tabulation:
112-6

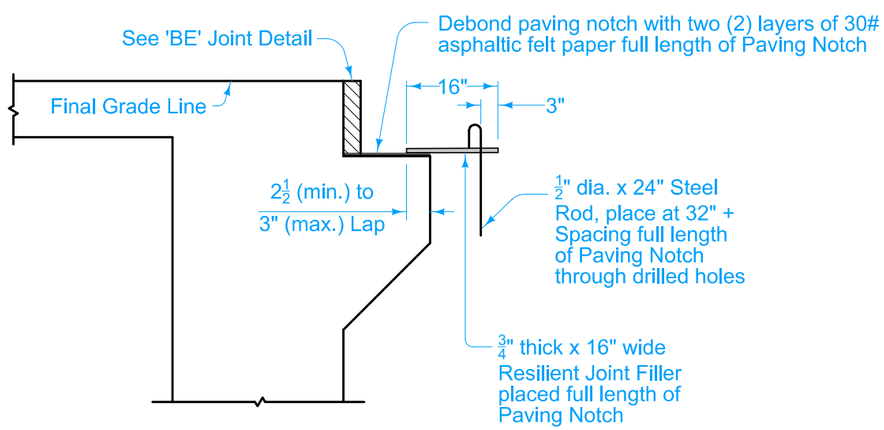

DETAIL 'B'

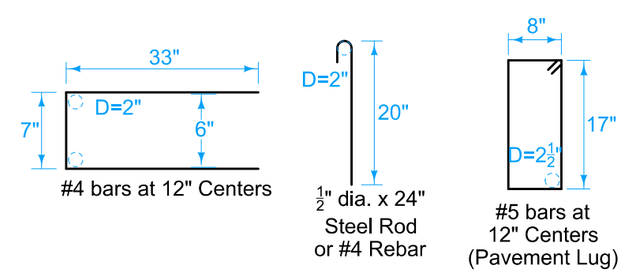

BENT BAR SHAPES

MOVEABLE ABUTMENT

MODIFIED STANDARD ROAD PLAN

BR-204

SHEET 1 of 4

MODIFICATIONS: Removed HMA details, switched single and unreinforced to double reinforced, removed CD joints

APPROVED BY DESIGN METHODS ENGINEER

DOUBLE REINFORCED 12" APPROACH WITH VARIABLE DEPTH PAVING NOTCH

FILE NO.	ENGLISH	DESIGN TEAM **Miller/Koch**	**Mahaska** COUNTY	PROJECT NUMBER **NHSX-063-3(108)--3H-62**	SHEET NUMBER **U.1**

9:26:24 AM 4/10/2026 jkoch pw:\\NTPwint1.dot.int.lan:PWMain\Documents\Projects\6206301025\Design\NHSX-063-3(108)--3H-62\CADD_Files\Sheet_Files\SHT_62063108_U01.dgn

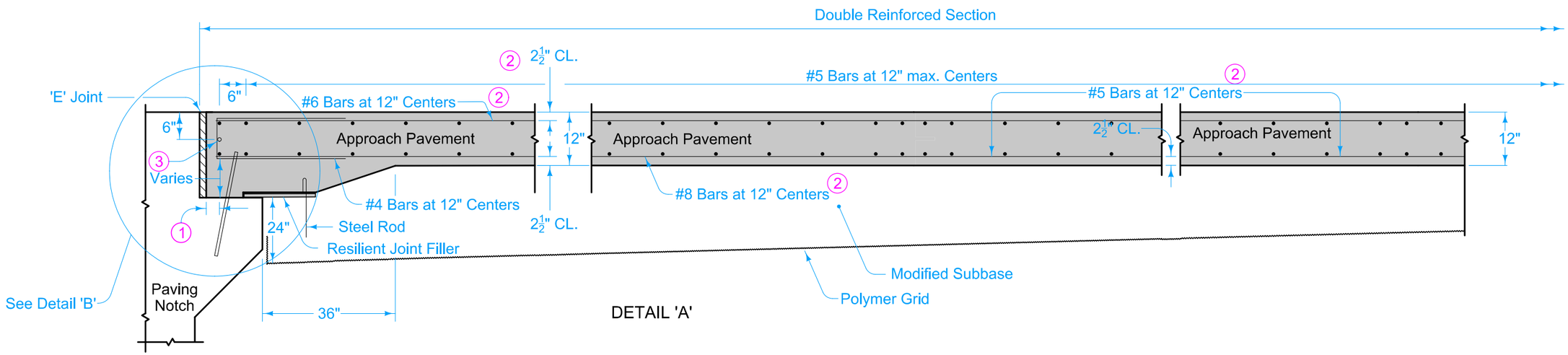

DETAIL 'A'

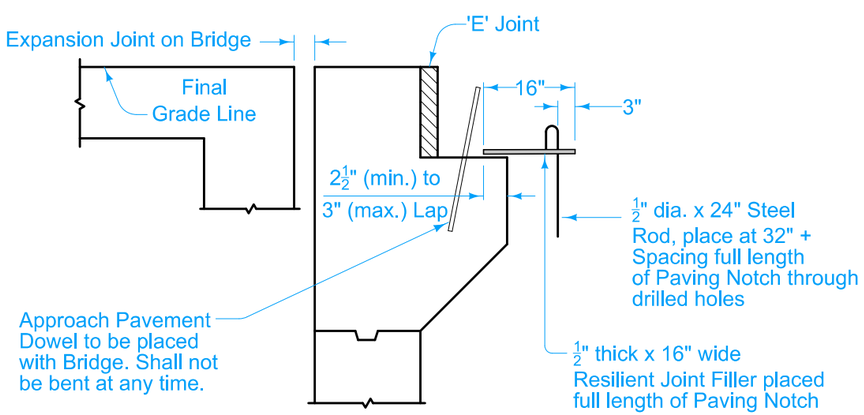

DETAIL 'B'

FIXED ABUTMENT

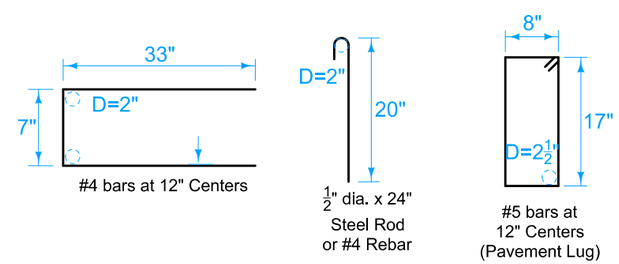

BENT BAR SHAPES

1. 2" to 2½" clear to bent bar.
2. Minimum lap length: #5 bars - 18 inches
   #6 bars - 27 inches
   #8 bars - 48 inches
3. If bridge is skewed, place additional #5 bar parallel to skewed face.

MODIFIED STANDARD ROAD PLAN

BR-204

SHEET 2 of 4

MODIFICATIONS: Removed HMA details, switched single and unreinforced to double reinforced, removed CD joints

APPROVED BY DESIGN METHODS ENGINEER

DOUBLE REINFORCED 12" APPROACH WITH VARIABLE DEPTH PAVING NOTCH

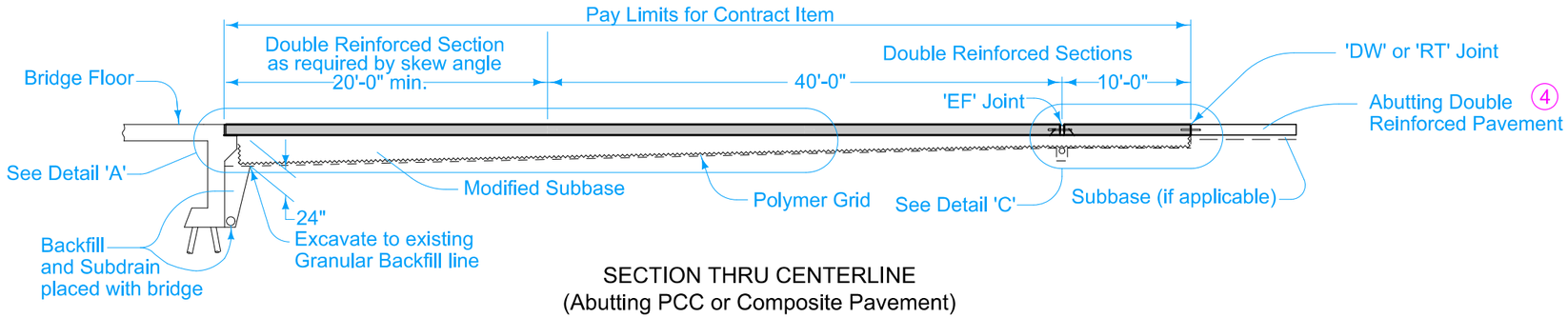

SECTION THRU CENTERLINE
(Abutting PCC or Composite Pavement)

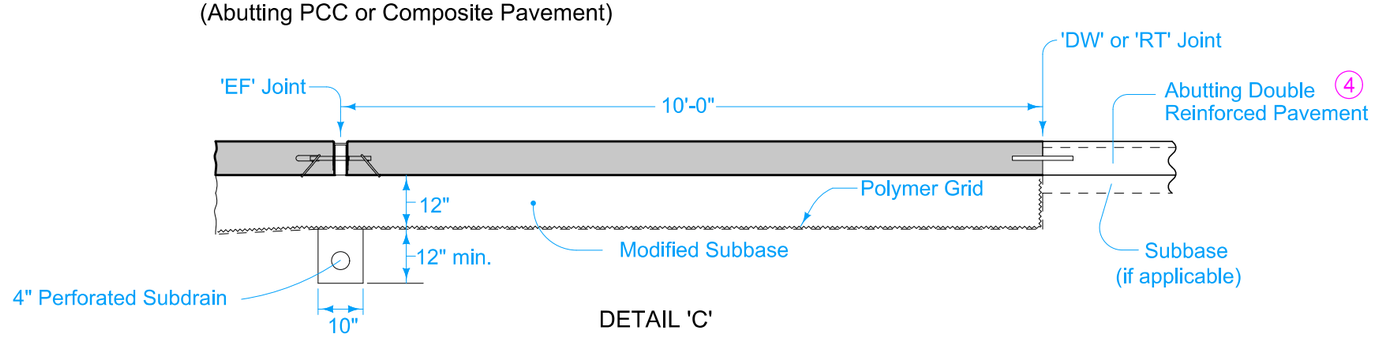

DETAIL 'C'

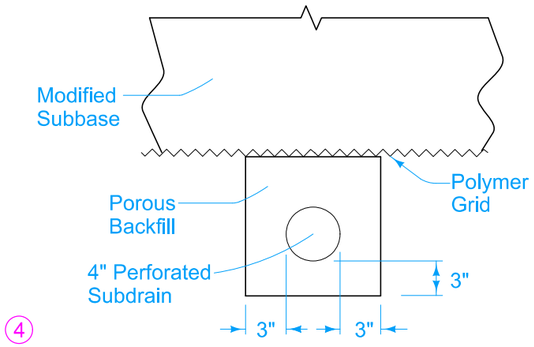

4" SUBDRAIN LOCATION

4 If abutting pavement (PCC or HMA) is not in place, refer to Modified BR-213.

MODIFIED
STANDARD ROAD PLAN

BR-204

SHEET 3 of 4

MODIFICATIONS: Removed HMA details, switched single and unreinforced to double reinforced, removed CD joints

APPROVED BY DESIGN METHODS ENGINEER

DOUBLE REINFORCED 12" APPROACH WITH VARIABLE DEPTH PAVING NOTCH

FILE NO.	ENGLISH	DESIGN TEAM **Miller/Koch**	**Mahaska** COUNTY	PROJECT NUMBER **NHSX-063-3(108)--3H-62**	SHEET NUMBER **U.3**

9:26:25 AM 4/10/2026 jkoch pw:\\NTPwint1.dot.int.lan:PWMain\Documents\Projects\6206301025\Design\NHSX-063-3(108)--3H-62\CADD_Files\Sheet_Files\SHT_62063108_U01.dgn

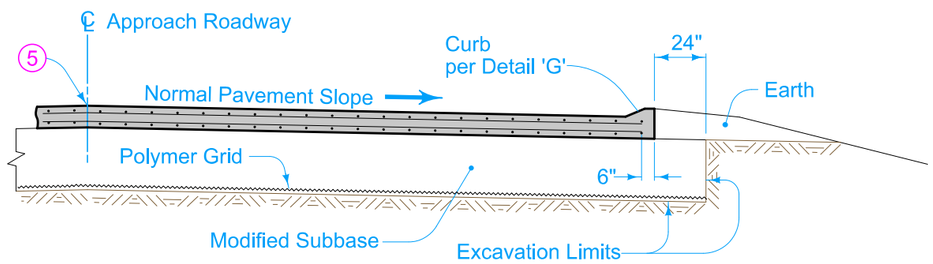

SECTION A-A (6)

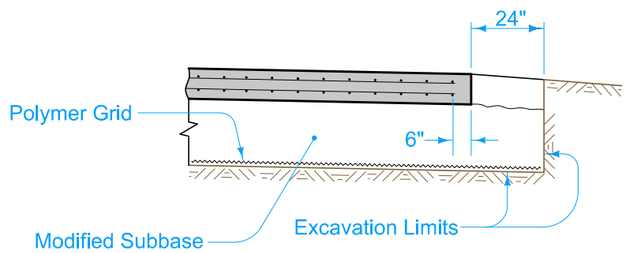

SECTION B-B (6)

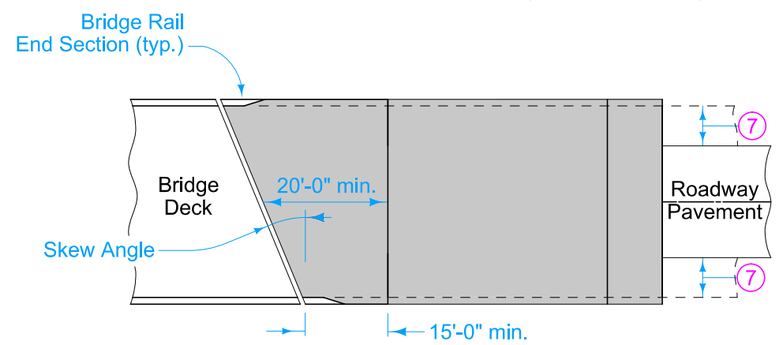

APPROACH PAVEMENT
LAYOUT AT A SKEW

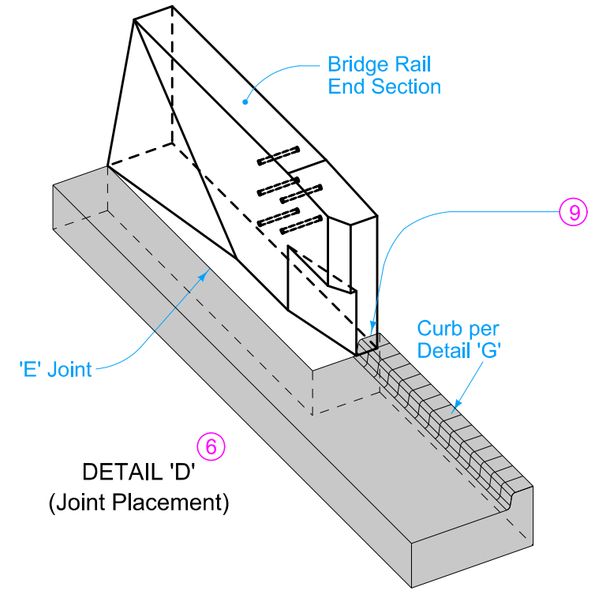

DETAIL 'D' (6)
(Joint Placement)

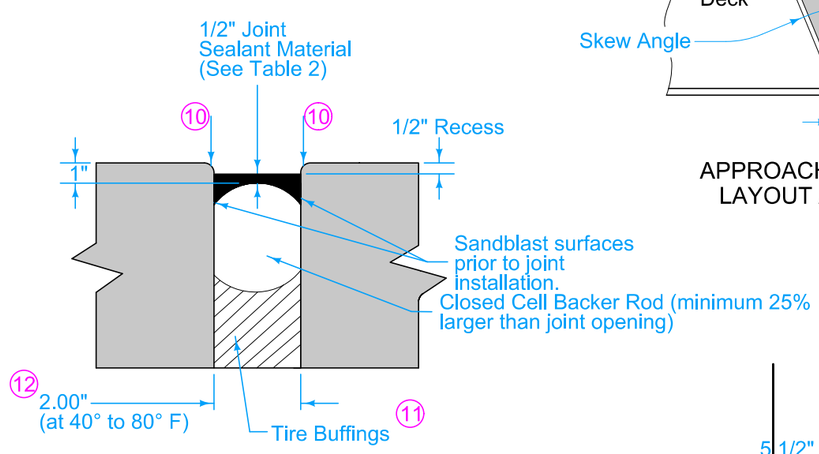

'BE'JOINT
DETAIL

Table 2
Approved List of Sealant
Dow - Dowsil 902 RCS
Sika - Sikasil 728 RCS
Watson Bowman Acme - Wabo SiliconeSeal
Pecora - 322FC

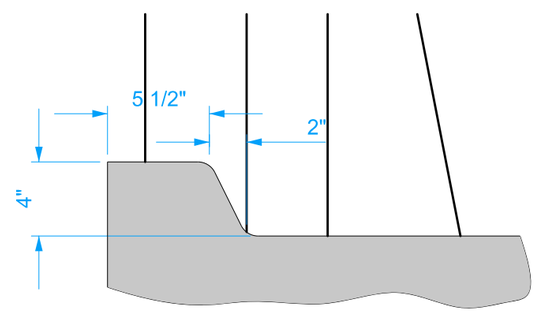

DETAIL 'G'

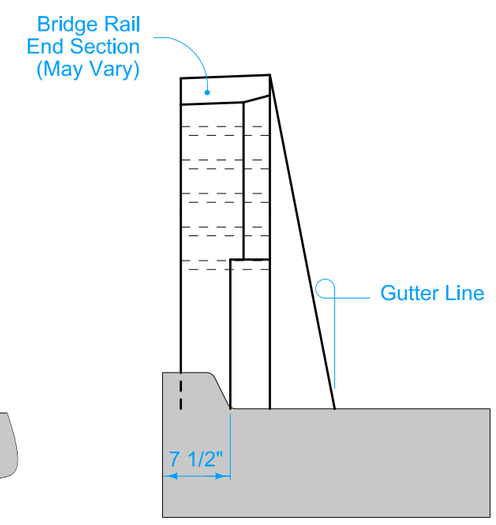

DETAIL 'E'

(5) Longitudinal Joint (PV-101):
Single pour - Saw cut joint per Detail B.
Two pours - Use 'KS-2' Joint.

(6) Refer to Modified BR-211.

(7) Design shoulder width.

(9) Joint at end of Bridge Rail End Section: Place joint filler the full depth of the bridge approach pavement. In areas with curb, place full depth of pavement plus curb and shape material to fit the shape of the curb per Section B-B of PV-101. Seal joint per Detail F of PV-101.

- Fixed Abutment Bridges: Type 'E' Joint.
- Moveable Abutment Bridges: Flexible Foam Expansion Joint Filler complying with Section 4136 of the Standard Specifications. Set width of gap to 2 inches. Joint length as required to completely fill from back side of curb to front face of bridge wing.

(10) Edge with ¼ inch tool for length of joint indicated if formed edging not required when cut with diamond blade saw.

(11) Compact tire buffings by spading with a square-nose shovel. Tire buffings shall not be larger than ½ inch.

(12) Setting Width Notes:

- Width is perpendicular to abutment.
- Temperature of concrete deck on the underside or shaded portion of the deck shall be between 40 to 80 degrees Farenheit when placing approach slab concrete.
- This 'BE' joint and the setting temperatures may be used for all concrete beam or slab bridges up to 575' in length and for all steel girder bridges up to 400' in length.

MODIFIED STANDARD ROAD PLAN

BR-204

SHEET 4 of 4

MODIFICATIONS: Removed HMA details, switched single and unreinforced to double reinforced, removed CD joints

APPROVED BY DESIGN METHODS ENGINEER

DOUBLE REINFORCED 12" APPROACH WITH VARIABLE DEPTH PAVING NOTCH

For joint details, see PV-101.

1. Build 4 inch Curb, unless noted otherwise in the plans. Refer to PV-102 for runout details.
2. See Modified BR-204.
3. Longitudinal Joint (PV-101):
   Single Pour - Saw cut joint per Detail B .
   Two Pours - Use 'BT-2' joint
4. Polymer Grid and excavation limits of Modified Subbase 2 feet outside of pavement edge. See Modified BR-204.
5. Slope subdrain to drain.
6. Place an "X" in the plastic concrete near the 'EF' joint at the outside edge of pavement.

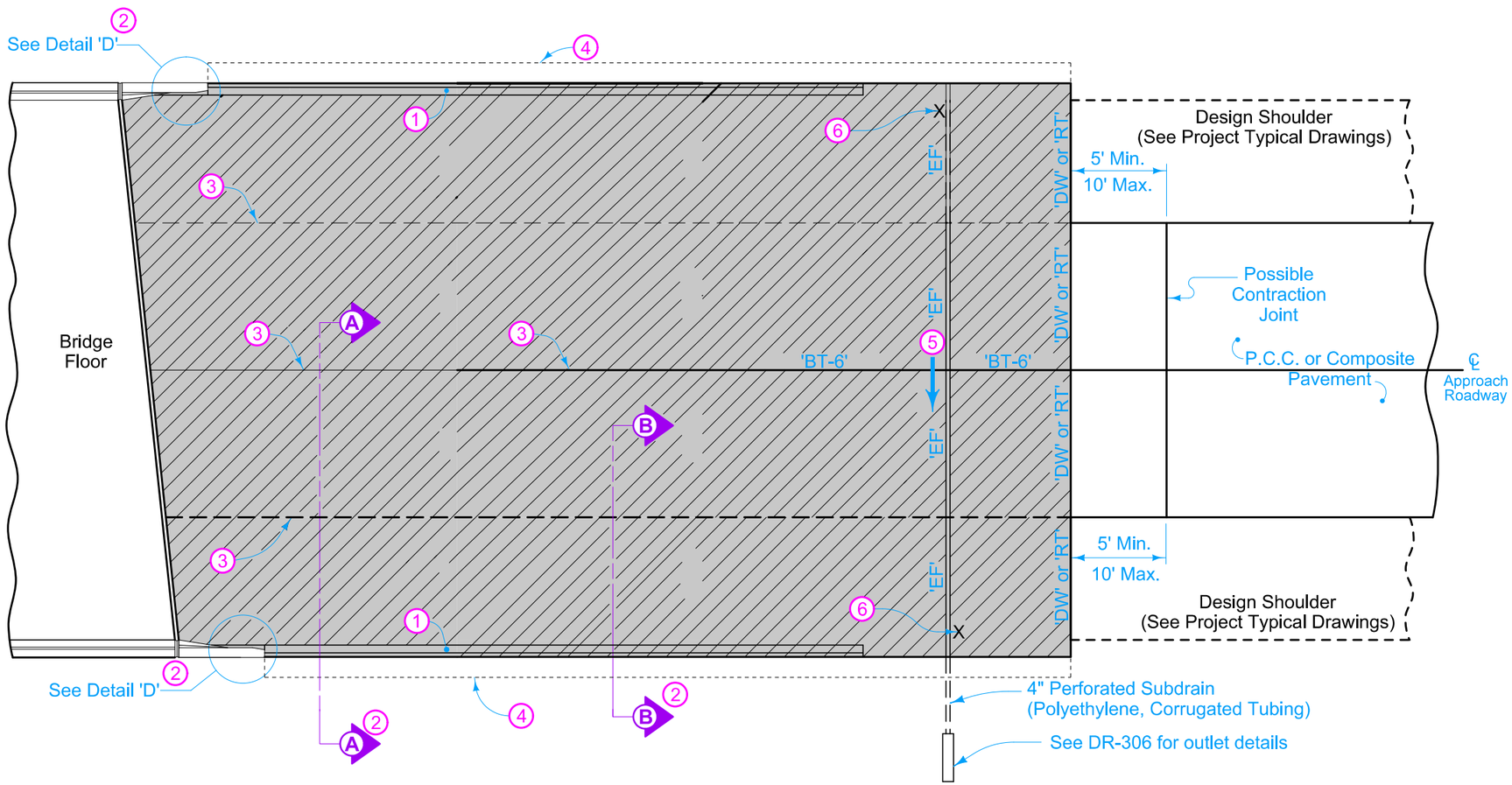

PLAN VIEW

Pay limits for contract item include the following areas:

Double Reinforced Section

MODIFIED STANDARD ROAD PLAN

BR-211

SHEET 1 of 1

MODIFICATIONS: Changed Single and Non-Reinforced to Double Reinforced, removed CD joints

APPROVED BY DESIGN METHODS ENGINEER

BRIDGE APPROACH (ABUTTING PCC OR COMPOSITE PAVEMENT)

FILE NO.	ENGLISH	DESIGN TEAM Miller/Koch	Mahaska COUNTY	PROJECT NUMBER NHSX-063-3(108)--3H-62	SHEET NUMBER U.5

9:26:26 AM 4/10/2026 jkoch pw:\\NTPwint1.dot.int.lan:PWMain\Documents\Projects\6206301025\Design\NHSX-063-3(108)--3H-62\CADD_Files\Sheet_Files\SHT_62063108_U01.dgn

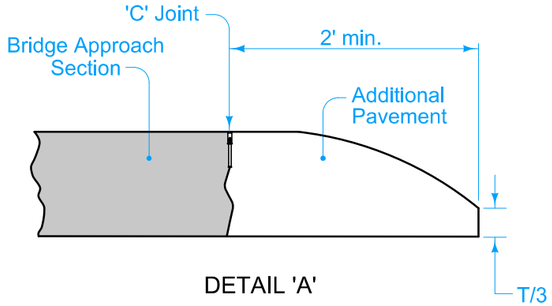

DETAIL 'A'

SECTION A-A

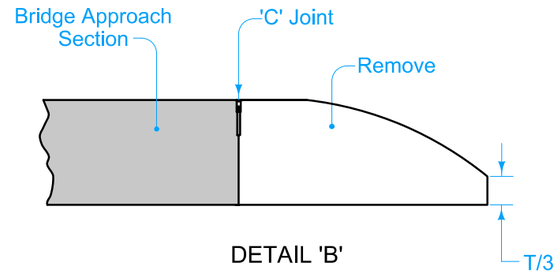

DETAIL 'B'

SECTION A-A

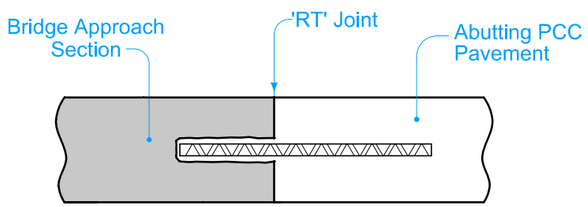

(For Abutting PCC Pavement)

DETAIL 'C'

SECTION A-A

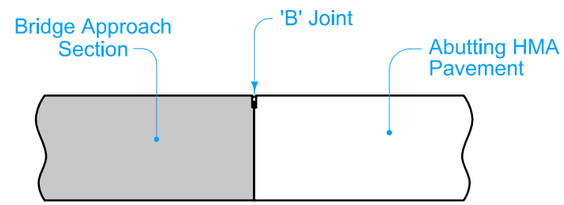

(For Abutting HMA Pavement)

DETAIL 'C'

SECTION A-A

For Jointing Details, see PV-101.

If abutting pavement (PCC or HMA) is not in place when bridge approach pavement is constructed, the following procedure applies:

1. The paving contractor of bridge the approach pavement paves Additional Pavement (as shown in Detail 'A'), constructs 'C' joint at end of bridge approach section, and leaves in this state.

2. The paving contractor of the abutting pavement saw cuts full depth at 'C' joint and removes Addtional Pavement (see Detail 'B'), then

3. The paving contractor of the abutting pavement constructs 'RT' joint or 'B' joint, accordingly (see Detail 'C').

This work is incidental to other work as follows:

Detail 'A': Bridge Approach, BR-203 or BR-204.

Details 'B' and 'C': Standard or Slip Form PCC Pavement, or Hot Mix Asphalt Mixture.

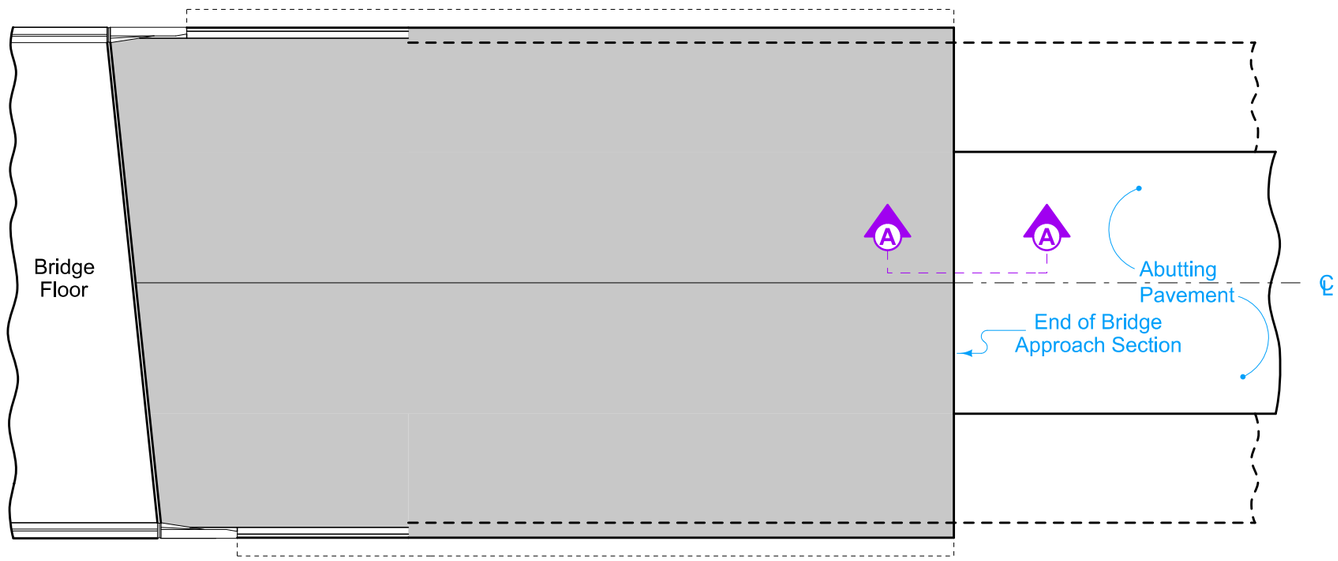

PLAN VIEW

Double Reinforced Section

MODIFIED STANDARD ROAD PLAN

BR-213

SHEET 1 of 1

MODIFICATIONS: Changed Single and Non-Reinforced to Double Reinforced.

APPROVED BY DESIGN METHODS ENGINEER

BRIDGE APPROACH (ABUTTING PAVEMENT)

FILE NO.	ENGLISH	DESIGN TEAM **Miller/Koch**	**Mahaska** COUNTY	PROJECT NUMBER **NHSX-063-3(108)--3H-62**	SHEET NUMBER **U.6**

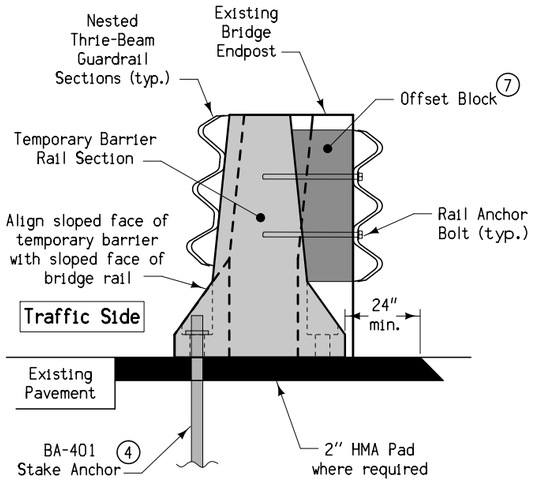

SECTION A-A

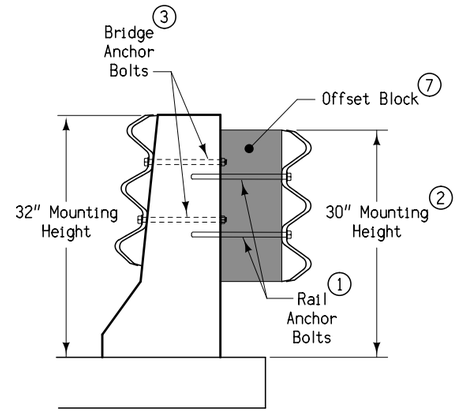

SECTION B-B

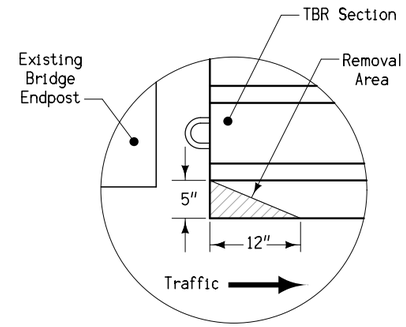

DETAIL 'A'

Where TBR is installed on the trailing end of a bridge, remove the toe of the first TBR section to the dimensions shown above.

Install temporary barrier rail on a flat, level surface. Removal of curb adjacent to bridge end posts may be necessary. Where anchored TBR sections are not located on existing pavement, construct a 2" minimum thickness HMA pad as shown. When required, removal of curb and construction of HMA pad will be considered incidental to this contract item.

Upon removal of Temporary to Permanent Barrier Connection, use non-shrink grout complying with Materials I.M. 491.13 to fill any holes that were drilled for attachment of Terminal Connectors to bridge rail.

Contract Item: Temporary to Permanent Barrier Connection

Item includes:
- 4 - 6'-3" Thrie-Beam Guardrail Sections
- 4 - BA-202 Terminal Connectors
- 48 - 5/8" dia. Guardrail Splice Bolts and Nuts
- 5 - 7/8" dia. x 12" Bridge Anchor Bolts and Nuts
- 10 - Washers for Bridge Anchor Bolts
- 19 - 3/4" dia. Rail Anchor Bolts: Powers Fasteners Wedge-Bolt Anchor OR Red Head Large Diameter Tapcon OR Simpson Titen HD Screw Anchor

The number of Temporary to Permanent Barrier Connections will be counted. The Contractor will be paid the contract unit price for each Temporary to Permanent Barrier Connection measured as provided above.

1. Install five (5) Rail Anchor Bolts in each Terminal Connector as shown. Ensure a minimum embedment depth of 6". Drill pilot holes with a core bit. Avoid drilling or cutting through reinforcing steel within TBR sections.
2. Shift non-traffic-side thrie-beam sections 16" farther from bridge and 2" lower in order to prevent interference with Bridge Anchor Bolts.
3. Attach traffic-side Terminal Connector to bridge endpost through existing holes. Use Bridge Anchor Bolts, Nuts, and Washers complying with Article 4155.02 for connecting steel beam guardrail to bridge barrier rail.
4. Each connection requires nine (9) BA-401 stake anchors as shown. Use of the strap anchorage is not allowed.
7. Furnish and install wood offset blocks meeting the requirements of Section 4164. Field trim offset blocks as required for proper fit.

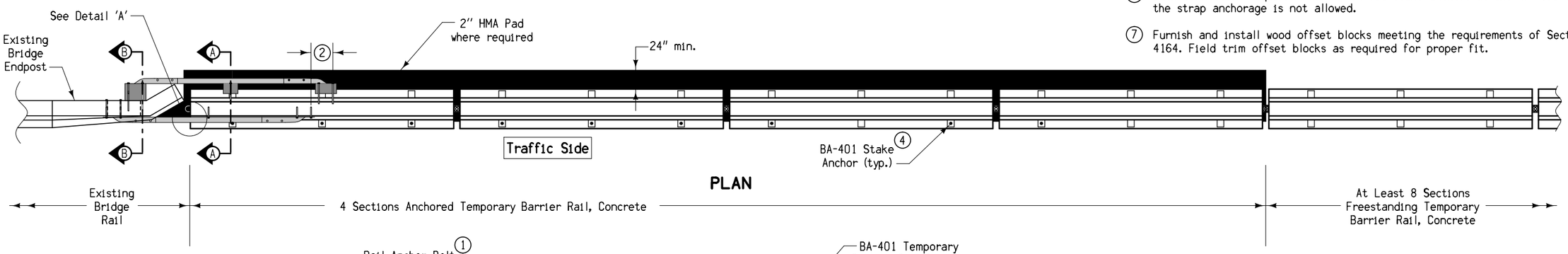

PLAN

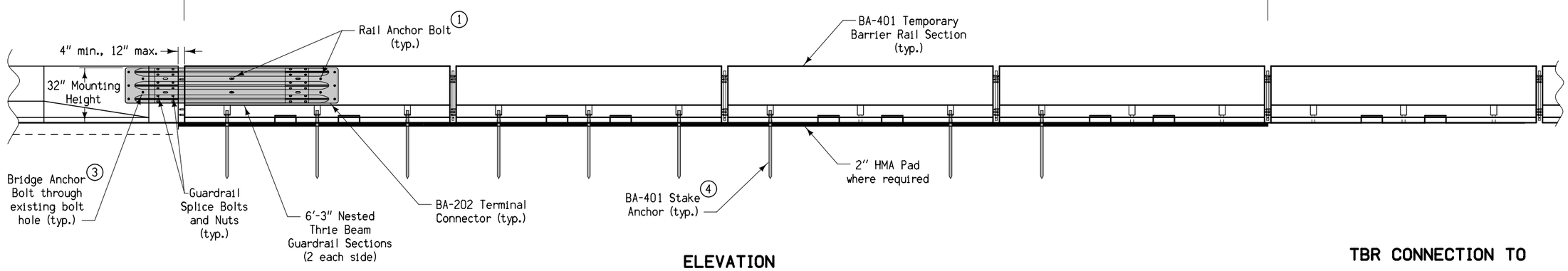

ELEVATION

TBR CONNECTION TO NJ-SHAPE BRIDGE RAIL WITH FLARED END SECTIONS

The price bid for "REMOVE AND REINSTALL CROSSOVER BARRICADE", EACH, is considered full compensation for furnishing all materials and work necessary to remove and reinstall the barricade as detailed.

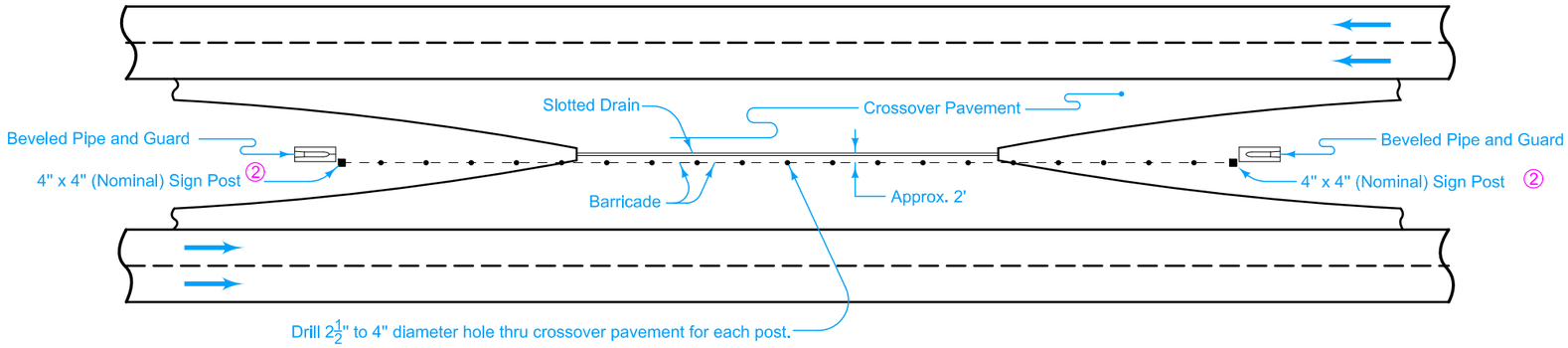

PLAN VIEW

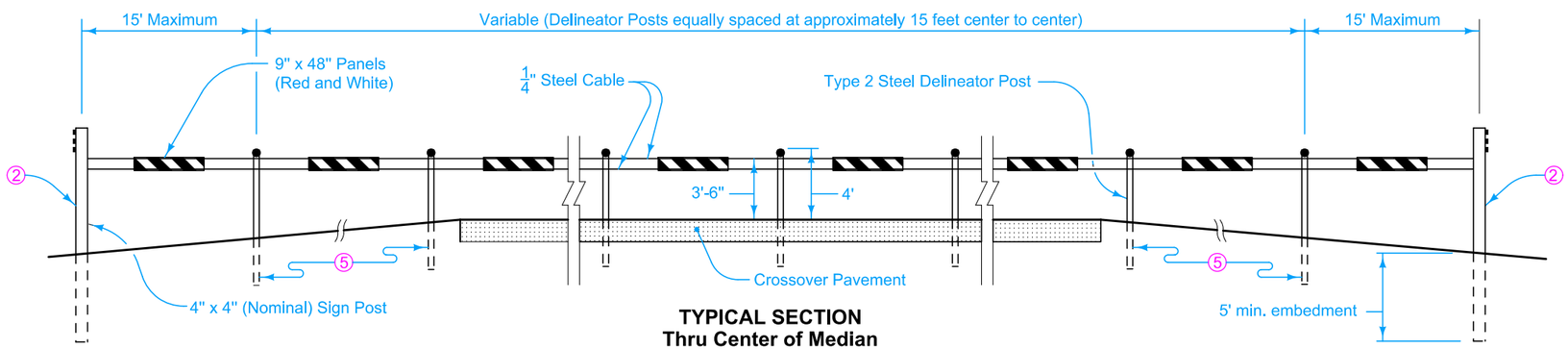

TYPICAL SECTION
Thru Center of Median

① 3 1/4" center mount yellow reflector, attached to sign post with 0.190 x 1.25 slotted pan head screws.

② Extend the barricade to within 2 feet from the top end of the concrete collar.

③ 0.125 inch aluminum panel with Type III or IV retroreflective sheeting on both sides.

④ Reflectorized red stripes on both sides shall slope from upper left to lower right of panel.

⑤ Embed all delineator posts a minimum of 2'-6".

⑥ 1/4" inch diameter steel cable.

List Of Materials For Barricading At Median Crossovers			
Quantities for Standard Road Plans			Items
PV-500	PV-503	PV-506	
25	19	18	Type 2 Steel Delineator Posts
2	2	2	4" x 4" (Nominal) Sign Post
56	44	42	3 ¼" Yellow Reflectors, center mounted
25	19	18	0.190 x 2.00 slotted pan head bolts and self-locking nuts
6	6	6	0.190 x 1.25 slotted pan head screws
26	20	19	9" x 48" Aluminum panels (red on white)
50	38	36	⅜" Cable clamps, lock washers and nuts
104	80	76	¼" Cable clamps, neoprene washers and self-locking nuts
4	4	4	⅜" x 6" Eye bolts, washers and nuts
4	4	4	¼" Cable clamps
820'	640'	610'	Approximate length of ¼" diameter Steel Cable
405'	315'	300'	Distance from Sign Post to Sign Post based on Note ②

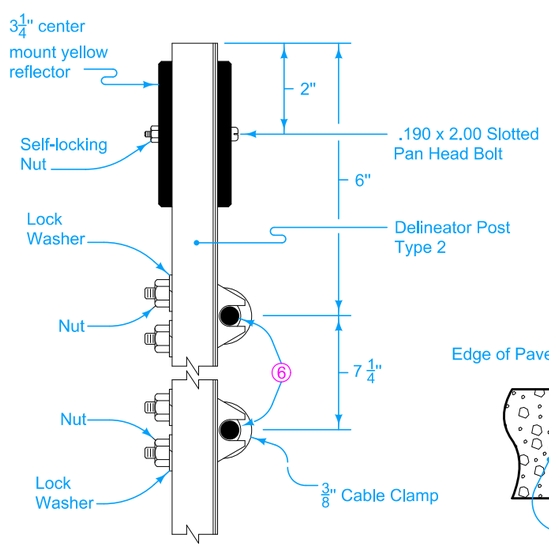

DELINEATOR POST ATTACHMENT DETAILS

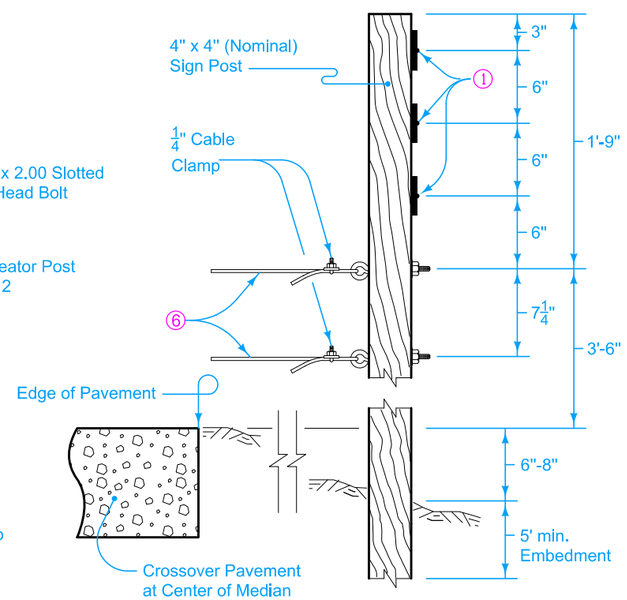

SIGN POST ATTACHMENT DETAILS

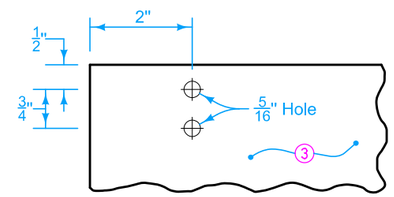

TYPICAL HOLE LOCATION
DETAIL 'A'

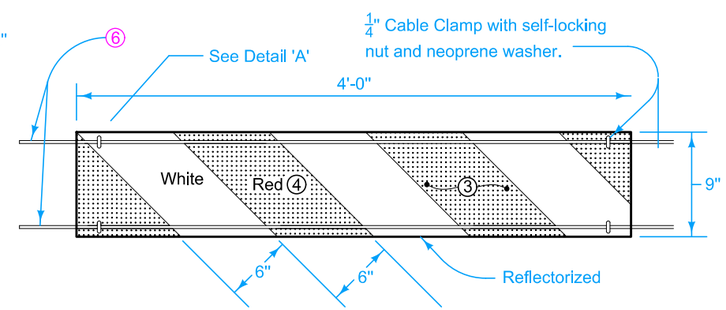

PANEL ATTACHMENT DETAILS

MODIFIED
ROAD DESIGN DETAIL

540-13
SHEET 1 of 1

MODIFICATIONS: Revised bid item note.

DETAILS OF BARRICADE AT CROSSOVER