BILL OF REINFORCING FOR ONE HEADWALL 30° SKEW CULVERT SPAN x CULVERT HEIGHT

LOCATION	SHAPE	10′ x 12′				10′ x 11″				10′ x 10′				10′ x 9′			
		BAR	NO.	LENGTH	WT.	BAR	NO.	LENGTH	WT.	BAR	NO.	LENGTH	WT.	BAR	NO.	LENGTH	WT.
FENCE ANCHOR (GALV.)		5fa	2	2′-10	6	5fa	2	2′-10	6	5fa	2	2′-10	6	5fa	2	2′-10	6
WINGWALL, F.F.H.		5b1	2	45′-10	100	5b1	2	42′-4	92	5b1	2	38′-11	81	5b1	2	35′-5	74
WINGWALL, F.F.H.		5b2	22 VAR	2 EACH 10′-1:44′-8	636	5b2	20 VAR	2 EACH 10′-1:41′-3	540	5b2	18 VAR	2 EACH 10′-1:37′-9	449	5b2	16 VAR	2 EACH 10′-1:34′-3	370
WINGWALL, B.F.H.		4b3	2	46′-2	64	4b3	2	42′-8	60	4b3	2	39′-2	52	4b3	2	35′-8	48
WINGWALL, B.F.H.		4b4	20 VAR	2 EACH 13′-10:45′-0	398	4b4	18 VAR	2 EACH 13′-10:41′-6	335	4b4	16 VAR	2 EACH 13′-9:38′-0	277	4b4	14 VAR	2 EACH 13′-9:34′-6	226
WINGWALL, F.F.V.		5c1	170 VAR	2 EACH 2′-8:14′-9	1544	5c1	156 VAR	2 EACH 2′-8:13′-9	1336	5c1	96 VAR	2 EACH 2′-8:12′-10	776	5c1	86 VAR	2 EACH 2′-8:11′-9	647
WINGWALL, F.F.V. (O)		5c2	2	14′-11	31	5c2	2	13′-11	29	5c2	2	12′-11	27	5c2	2	11′-11	25
WINGWALL, F.F.V. (A)		5c2	2	14′-11	31	5c2	2	13′-11	29	5c2	2	12′-11	27	5c2	2	11′-11	25
WINGWALL, B.F.V.		6c3	86 VAR	2 EACH 6′-3:18′-4	1588	6c3	78 VAR	2 EACH 6′-3:17′-2	1372	6c3	72 VAR	2 EACH 6′-3:16′-4	1221	5c3	64 VAR	2 EACH 6′-3:15′-2	715
WINGWALL, B.F.V. (O)		6c4	1	18′-5	28	6c4	1	17′-5	26	6c4	1	16′-5	25	5c4	1	15′-5	16
WINGWALL, B.F.V. (A)		6c4	3	18′-5	83	6c4	3	17′-5	78	6c4	3	16′-5	74	5c4	3	15′-5	48
WINGWALL, B.F.V.		6c5	54	8′-6	689	6c5	50	8′-6	638	6c5	46	8′-6	587	6c5	42	8′-6	372
APRON, LONGIT., BOTT.		4d1	9	45′-9	287	4d1	9	42′-3	266	4d1	9	38′-9	233	4d1	9	35′-4	212
APRON, LONGIT., TOP		6f1	11	45′-9	789	6f1	11	42′-3	731	6f1	11	38′-9	640	6f1	11	35′-4	584
PARAPET, VERTICAL		4l1	24	7′-0	112	4l1	24	7′-0	112	4l1	24	7′-0	112	4l1	24	7′-0	112
PARAPET, HORIZ.		7j1	4	13′-6	110	7j1	4	13′-6	110	7j1	4	13′-1	107	7j1	4	13′-1	107
APRON, TRANS., TOP		6m1	55	12′-2	1005	6m1	50	12′-2	914	6m1	45	11′-10	800	6m1	41	11′-10	729
APRON, TRANS., TOP		6m2	7 VAR	2′-1:9′-11	63	6m2	7 VAR	2′-7:10′-5	68	6m2	7 VAR	2′-11:10′-9	72	6m2	7 VAR	2′-1:9′-11	63
APRON, TRANS., BOTT.		5m3	73	10′-9	818	5m3	67	10′-9	751	5m3	61	10′-4	657	6m3	28	11′-2	470
CURTAIN, HORIZ.		6p1	6	13′-9	124	6p1	6	13′-9	124	6p1	6	13′-5	121	6p1	6	13′-5	121
WING SLOPE, BOTH F.		6s1	4	40′-3	254	6s1	4	36′-8	220	6s1	4	33′-1	199	6s1	4	29′-5	177
WING SLOPE, BOTH F. (O)		6s2	2	8′-4	25	6s2	2	8′-4	25	6s2	2	8′-5	25	6s2	2	8′-5	25
WING SLOPE, BOTH F. (A)		6s3	2	8′-10	27	6s3	2	8′-10	27	6s3	2	8′-10	27	6s3	2	8′-10	27
WING SLOPE, F. F.		6s4	2	12′-0	36	6s4	2	12′-0	36	6s4	2	12′-0	36	6s4	2	12′-0	36
WING SLOPE, F. F.		6s5	2	38′-1	114	6s5	2	34′-6	104	6s5	2	30′-10	93	6s5	2	27′-3	82
CURTAIN, VERT.		5t1	12	7′-11	99	5t1	12	7′-8	96	5t1	12	7′-5	93	5t1	12	7′-2	90
CURTAIN, VERT., ENDS		5t2	4	8′-1	34	5t2	4	7′-10	33	5t2	4	7′-7	32	5t2	4	7′-4	31
BRACKET, VERT.		5u1	4	6′-8	28	5u1	4	6′-5	27	5u1	4	6′-2	26	5u1	4	6′-0	25

LOCATION	10′ x 8′				10′ x 7′				10′ x 6′				10′ x 5′				10′ x 4′			
	BAR	NO.	LENGTH	WT.	BAR	NO.	LENGTH	WT.	BAR	NO.	LENGTH	WT.	BAR	NO.	LENGTH	WT.	BAR	NO.	LENGTH	WT.
FENCE ANCHOR (GALV.)	5fa	2	2′-10	6	5fa	2	2′-10	6	5fa	2	2′-10	6	5fa	2	2′-10	6	5fa	2	2′-10	6
WINGWALL, F.F.H.	5b1	2	32′-0	67	5b1	2	28′-6	59	5b1	2	25′-1	52	5b1	2	21′-7	45	5b1	2	18′-1	38
WINGWALL, F.F.H.	5b2	14 VAR	2 EACH 10′-1:30′-10	299	5b2	12 VAR	2 EACH 10′-1:27′-4	234	5b2	10 VAR	2 EACH 10′-0:23′-11	177	5b2	8 VAR	2 EACH 10′-0:20′-5	127	5b2	6 VAR	2 EACH 10′-0:17′-0	84
WINGWALL, B.F.H.	4b3	2	32′-3	43	4b3	2	28′-8	38	4b3	2	25′-3	34	4b3	2	21′-9	29	4b3	2	18′-4	24
WINGWALL, B.F.H.	4b4	12 VAR	2 EACH 13′-9:31′-1	180	4b4	10 VAR	2 EACH 13′-8:27′-7	138	4b4	8 VAR	2 EACH 13′-8:24′-1	101	4b4	6 VAR	2 EACH 13′-8:20′-7	69	4b4	4 VAR	2 EACH 13′-8:17′-2	41
WINGWALL, F.F.V.	5c1	58 VAR	2 EACH 2′-8:10′-9	406	5c1	50 VAR	2 EACH 2′-8:9′-7	319	4c1	44 VAR	2 EACH 2′-8:8′-8	167	4c1	36 VAR	2 EACH 2′-8:7′-7	123	4c1	30 VAR	2 EACH 2′-8:6′-8	94
WINGWALL, F.F.V. (O)	5c2	2	10′-11	23	5c2	2	9′-11	21	4c2	2	8′-11	12	4c2	2	7′-11	11	4c2	2	6′-11	9
WINGWALL, F.F.V. (A)	5c2	2	10′-11	23	5c2	2	9′-11	21	4c2	2	8′-11	12	4c2	2	7′-11	11	4c2	2	6′-11	9
WINGWALL, B.F.V.	5c3	58 VAR	2 EACH 6′-3:14′-4	623	5c3	50 VAR	2 EACH 6′-3:13′-2	506	5c3	44 VAR	2 EACH 6′-3:12′-3	425	6c3	36 VAR	2 EACH 6′-3:11′-2	471	6c3	30 VAR	2 EACH 6′-3:10′-3	372
WINGWALL, B.F.V. (O)	5c4	1	14′-5	15	5c4	1	13′-5	14	5c4	1	12′-5	13	6c4	1	11′-5	17	6c4	1	10′-5	16
WINGWALL, B.F.V. (A)	5c4	3	14′-5	45	5c4	3	13′-5	42	5c4	3	12′-5	39	6c4	3	11′-5	51	6c4	3	10′-5	47
WINGWALL, B.F.V.	5c5	36	8′-6	319	5c5	34	8′-6	301	5c5	28	8′-5	246	c5	—	—	—	c5	—	—	—
APRON, LONGIT., BOTT.	4d1	9	31′-10	191	4d1	9	28′-5	171	4d1	9	24′-11	150	4d1	9	21′-6	129	4d1	9	18′-0	108
APRON, LONGIT., TOP	6f1	11	31′-10	526	6f1	11	28′-5	470	6f1	11	24′-11	412	6f1	11	21′-6	355	6f1	11	18′-0	297
PARAPET, VERTICAL	4l1	24	7′-0	112	4l1	24	7′-0	112	4l1	24	7′-0	112	4l1	24	7′-0	112	4l1	24	7′-0	112
PARAPET, HORIZ.	7j1	4	13′-1	107	7j1	4	12′-11	106	7j1	4	12′-11	106	7j1	4	12′-11	106	7j1	4	12′-11	106
APRON, TRANS., TOP	6m1	36	11′-10	640	6m1	32	11′-8	561	6m1	27	11′-8	473	6m1	22	11′-8	386	6m1	18	11′-8	315
APRON, TRANS., TOP	6m2	7 VAR	2′-7:10′-5	68	6m2	6 VAR	3′-0:9′-6	56	6m2	7 VAR	2′-3:10′-0	64	6m2	7 VAR	2′-9:10′-6	70	6m2	6 VAR	3′-3:9′-8	58
APRON, TRANS., BOTT.	5m3	25	10′-4	269	5m3	22	10′-2	233	4m3	19	9′-4	118	4m3	16	9′-4	100	4m3	13	9′-4	81
CURTAIN, HORIZ.	6p1	6	13′-5	121	6p1	5	13′-3	100	6p1	5	13′-3	100	6p1	5	13′-3	100	6p1	5	13′-3	100
WING SLOPE, BOTH F.	6s1	4	25′-10	155	6s1	4	22′-3	134	6s1	4	18′-8	112	6s1	4	15′-0	90	6s1	4	11′-5	69
WING SLOPE, BOTH F. (O)	6s2	2	8′-5	25	6s2	2	8′-5	25	6s2	2	8′-4	25	6s2	2	8′-4	25	6s2	2	8′-4	25
WING SLOPE, BOTH F. (A)	6s3	2	8′-10	27	6s3	2	8′-10	27	6s3	2	8′-9	26	6s3	2	8′-9	26	6s3	2	8′-9	26
WING SLOPE, F. F.	6s4	2	12′-0	36	6s4	2	12′-0	36	6s4	2	12′-0	36	6s4	2	12′-0	36	6s4	2	12′-0	36
WING SLOPE, F. F.	6s5	2	23′-8	71	6s5	2	20′-0	60	6s5	2	16′-5	49	6s5	2	12′-10	39	6s5	2	9′-3	28
CURTAIN, VERT.	5t1	12	6′-11	87	5t1	12	6′-8	83	5t1	12	6′-5	80	5t1	12	6′-5	80	5t1	12	6′-5	80
CURTAIN, VERT., ENDS	5t2	4	7′-1	30	5t2	4	6′-10	29	5t2	4	6′-7	27	5t2	4	6′-7	27	5t2	4	6′-7	27
BRACKET, VERT.	5u1	4	5′-9	24	5u1	4	5′-6	23	5u1	4	5′-4	22	5u1	4	5′-4	22	5u1	4	5′-4	22

ESTIMATED QUANTITIES ONE HEADWALL	9123 LBS.			8185 LBS.			6875 LBS.			5463 LBS.			4538 LBS.			3925 LBS.			3196 LBS.			2663 LBS.			2230 LBS.		
REINF. STEEL																											
CONCRETE	PARAPET Δ	1.7	53.5 CU.YD.	PARAPET Δ	1.7	47.9 CU.YD.	PARAPET Δ	1.6	38.7 CU.YD.	PARAPET Δ	1.6	34.2 CU.YD.	PARAPET Δ	1.6	29.9 CU.YD.	PARAPET Δ	1.5	24.5 CU.YD.	PARAPET Δ	1.5	20.8 CU.YD.	PARAPET Δ	1.5	17.6 CU.YD.	PARAPET Δ	1.5	14.5 CU.YD.
	WINGWALLS	25.1		WINGWALLS	21.6		WINGWALLS	15.2		WINGWALLS	12.7		WINGWALLS	10.4		WINGWALLS	7.4		WINGWALLS	5.7		WINGWALLS	4.2		WINGWALLS	2.9	
	APRON	26.7		APRON	24.6		APRON	21.9		APRON	19.9		APRON	17.9		APRON	15.6		APRON	13.6		APRON	11.9		APRON	10.1	

Δ INCLUDES TOP OF WINGWALL QUANTITIES.

NOTE: WEIGHT OF BARS OVER 40′-0 LONG INCLUDE AN ALLOWANCE OF 2′-0 FOR LAP.

(A) - INDICATES BAR LOCATED AT ACUTE CORNER.
(O) - INDICATES BAR LOCATED AT OBTUSE CORNER.
REFER TO SHEET PWH 30-1-12 FOR ACUTE AND OBTUSE CORNER LOCATIONS.

BENT BAR DETAILS

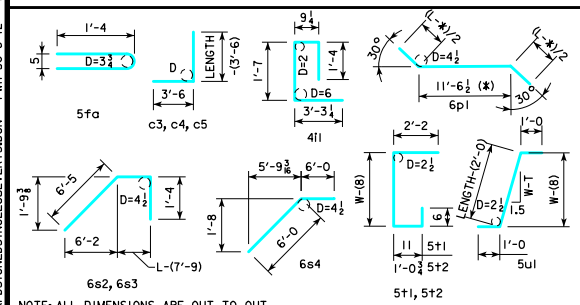

NOTE: ALL DIMENSIONS ARE OUT TO OUT
D = PIN DIAMETER
SEE TABLE AT RIGHT FOR PIN DIAMETER "D" OF c BARS

c BAR PIN DIAMETER	
BAR SIZE	D
4	3
5	3¾
6	4½

HEADWALL NOTES:

THIS HEADWALL IS BASED ON A 3:1 SLOPE NORMAL TO CENTERLINE OF ROADWAY.

THE SIDES OF THE FOOTING ARE TO BE FORMED TO INSURE CORRECT LINE AND GRADE.

ALL EXPOSED CORNERS OF 90° OR SHARPER ARE TO BE FILLETED WITH A ¾" DRESSED AND BEVELED STRIP.

ALL REINFORCING IS TO BE SECURELY WIRED IN PLACE BEFORE THE CONCRETE IS POURED. ALL SLAB AND FLOOR REINFORCING STEEL IS TO BE SUPPORTED BY BAR CHAIRS AT INTERVALS OF NOT MORE THAN 3′-0 IN EITHER DIRECTION AS OUTLINED IN THE STANDARD SPECIFICATIONS.

CLEAR DISTANCE FROM FACE OF CONCRETE TO NEAR REINFORCING BAR IS TO BE 2" UNLESS OTHERWISE NOTED OR SHOWN. CLEARANCE TO THE BOTTOM ENDS OF VERTICAL BARS SHALL BE 3 INCHES.

CONCRETE QUANTITIES ARE ESTIMATED FROM BACK OF PARAPET.

HORIZONTAL TAILS OF BARS "b" & "s" ESTIMATED TO EXTEND 2′-0 BEYOND BACK OF PARAPET (INTO END OF BARREL). LONGITUDINAL BARS "4d1" AND "6f1" ESTIMATED TO PROJECT INTO END SECTION OF BARREL A MINIMUM OF 2′-0 BEYOND BACK OF PARAPET. THE "LENGTH" COLUMN REFLECTS TOTAL NUMBER OF FEET NECESSARY TO MEET THESE REQUIREMENTS.

07-2016
LATEST REVISION DATE

APPROVED BY BRIDGE ENGINEER

Iowa Department of Transportation
Highway Division

STANDARD DESIGN - SINGLE REINFORCED CONCRETE BOX CULVERTS

PARALLEL WING HEADWALLS

APRIL, 2012

QUANTITY TABULATION 10′-0 SPAN 30° SKEW

PWH 30-6-12

REVISED 07-2016 - CHANGED FENCE ANCHOR BAR (5fa) FROM 3′-1 TO 2′-10.
ENGLISH,RFDSIGNEDSINGLECULVERTS.DGN - PWH 30-6-12 - THIS SHEET ISSUED 04-12.