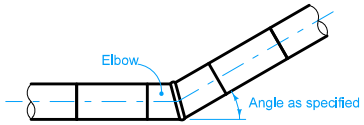

TYPICAL PLAN WITH ELBOW

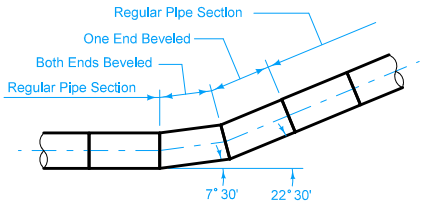

TYPICAL PLAN WITH "D" SECTIONS

REINFORCING BARS		
Size "D"	Bar Size	Number Required
12" - 21"	#5 or 16	4
24" - 42"	#5 or 16	8
48" - 60"	#11 or 36	8
66" - 84"	#11 or 36	8

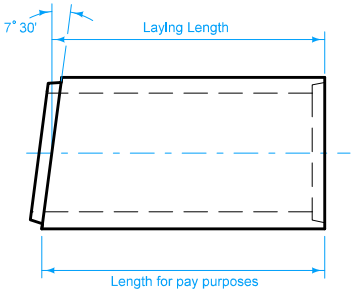

TYPE "D" SECTION (SINGLE BEVEL)

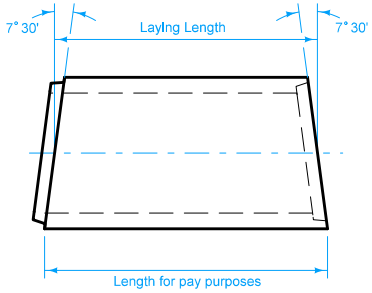

TYPE "D" SECTION (DOUBLE BEVEL)

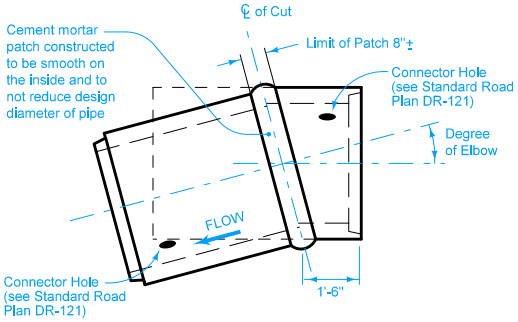

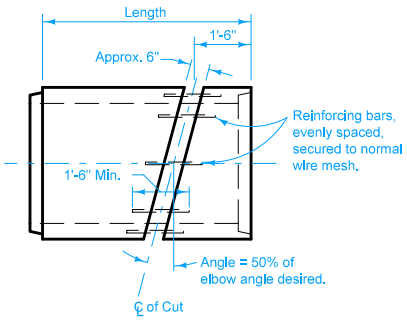

TYPICAL CONCRETE PIPE ELBOW

Fabricate concrete pipe elbows and Type "D" pipe sections according to AASHTO M 170 for the size and class of pipe specified. Meet the requirements of AASHTO M 32 for wire reinforcing.

Unless specified otherwise, bevel the Type "D" section on a 7.5 degree miter. The bevel may be provided on either the tongue end or groove end of the pipe. In certain cases, both ends of the pipe section may require the beveled end.

Type "D" pipe sections will be included in the measurement for pipe culvert. No payment will be made specifically for the Type "D" section bevel. This is incidental to the price bid.

The Contractor may substitute an approved elbow for "D" section bends of 15 degrees or less. Such elbows will not be measured for payment but will be considered incidental to price bid for culvert pipe.

Refer to the plans for degree of elbow required for each individual installation. Minimum length of elbow is to be 5'-6" measured along centerline of pipe. Design length of pipe will be considered to be 6'-0".

Fabricate elbows using a method approved by the Engineer and which results in a finished product indicated hereon. The typical method for fabricating elbows is as follows: Steel rods, as specified, are attached to the normal wire reinforcing cage as indicated hereon. After pipe is cast, make a cut 50% of the degree of elbow desired as indicated and cut the reinforcing rods and mesh on centerline of the cut. Rotate the severed section of pipe 180 degrees and reweld the reinforcing to the opposite rods. Patch the remaining opening with cement mortar to complete a satisfactorily completed elbow as shown.

For pipe sizes up through 48" in diameter, bends may be accomplished in increments of 7.5 degrees by using standard "D" sections in appropriate combinations.

For pipe sizes from 54" to 72" in diameter, limit the "D" section to a maximum of 5 degree miter on any one end of pipe section.

For pipe sizes through 48" in diameter, bends from 15 to 45 degrees may be accomplished using a single elbow. Bends more than 45 degrees require two elbows unless approved otherwise by the Engineer.

Possible Tabulation:
104-3

IOWA DOT

STANDARD ROAD PLAN

REVISION	
1	04-18-17

DR-141

SHEET 1 of 1

REVISIONS: Changed title from PIPE BENDS AND HALF PIPE to PIPE BENDS. Remove DETAILS OF HALF PIPE SECTION view. Removed references to Half Pipe in Notes.

Brian Smith
APPROVED BY DESIGN METHODS ENGINEER

PIPE BENDS